Straight Drop

ASSEMBLY MANUAL

v2.5 | June 2025

ROLLEASE ACMEDA
PRECISION IN MOTION

CONTENTS

SECTION A | TOOLS AND ADDITIONAL ITEMS REQUIRED 3
TOOLS REQUIRED 3
SECTION B | SYSTEM DETAILS 4
OVERVIEW..... 4
SECTION C | BOM & DEDUCTIONS 5
BOM & DEDUCTIONS 5
SECTION D | PREPARATION 6
FABRIC PREPARATION 6
SECTION E | ASSEMBLY 7
BOX 120 / BOX 160 7
OPEN BRACKETS | 78MM TUBE 9
CONTROL | MOTOR | 78MM TUBE 10
CONTROL | CRANK | 78MM TUBE 10
CONTROL | IDLER | 78MM TUBE 11
FABRIC ASSEMBLY | 78MM TUBE 11
BOX 160 | 110MM TUBE 11
CONTROL | MOTOR | S100 TUBES 12
WEIGHT BAR ASSEMBLY 15
PREPARE & PACK FOR TRANSPORTATION 17
APPENDICES **18**
APPENDIX A: DOCUMENT CHANGE NOTES 18

DISCLAIMER

INTRODUCTION

This assembly manual for Straight Drop system has been produced by Rollease Acmeda to supply the necessary information for the safe and correct assembly of Straight Drop system.

DISCLAIMER

Rollease Acmeda has used reasonable care in preparing the information included in this document, but makes no representations or warranties as to the completeness or accuracy of the information. Information is supplied upon the condition that the persons receiving the information will make their own determination as to its suitability for their purposes prior to use. Rollease Acmeda assumes no liability whatsoever for any damages incurred by you resulting from errors in or omissions from the information included herein. Rollease Acmeda reserves the right to make changes without further notice to any products to improve reliability, function or design.

COPYRIGHT

COPYRIGHT © ROLLEASE ACMEDA

All rights are reserved. No part of this document may be reproduced or utilised in any means, by any means, electronic or mechanical including photocopying, recordings, or by any information storage or retrieval system, without the express permission from Rollease Acmeda.

ROLLEASE ACMEDA

TOOLS REQUIRED

1. Circular Cutting Blade

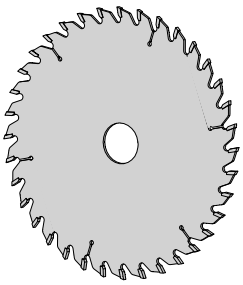

2. Drill

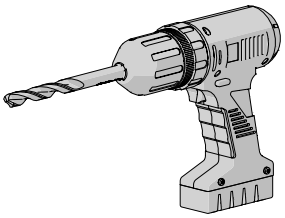

3. Drill Bits

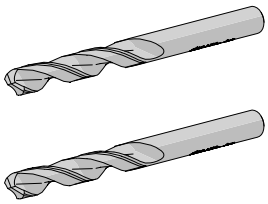

4. Impulse Welder + Zip Welding Jig

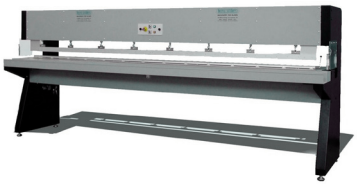

5. Phillips Head Screwdriver

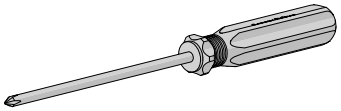

6. Pliers

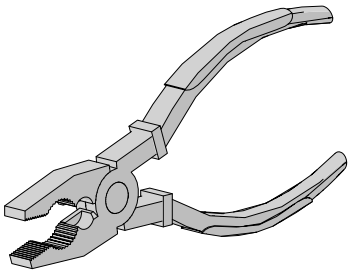

7. Scissors

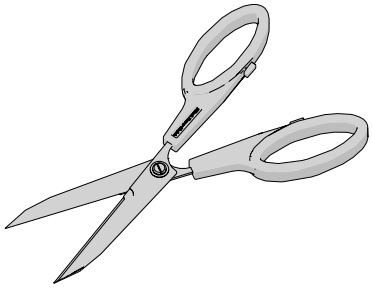

8. Measuring Tape

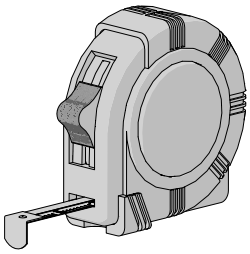

9. Pencil

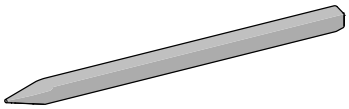

10. Allen Key Set (Metric)

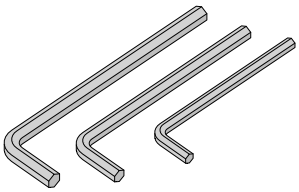

© Copyright All Rights Reserved Rollease Acmeda

OVERVIEW

GENERAL SCHEMATIC

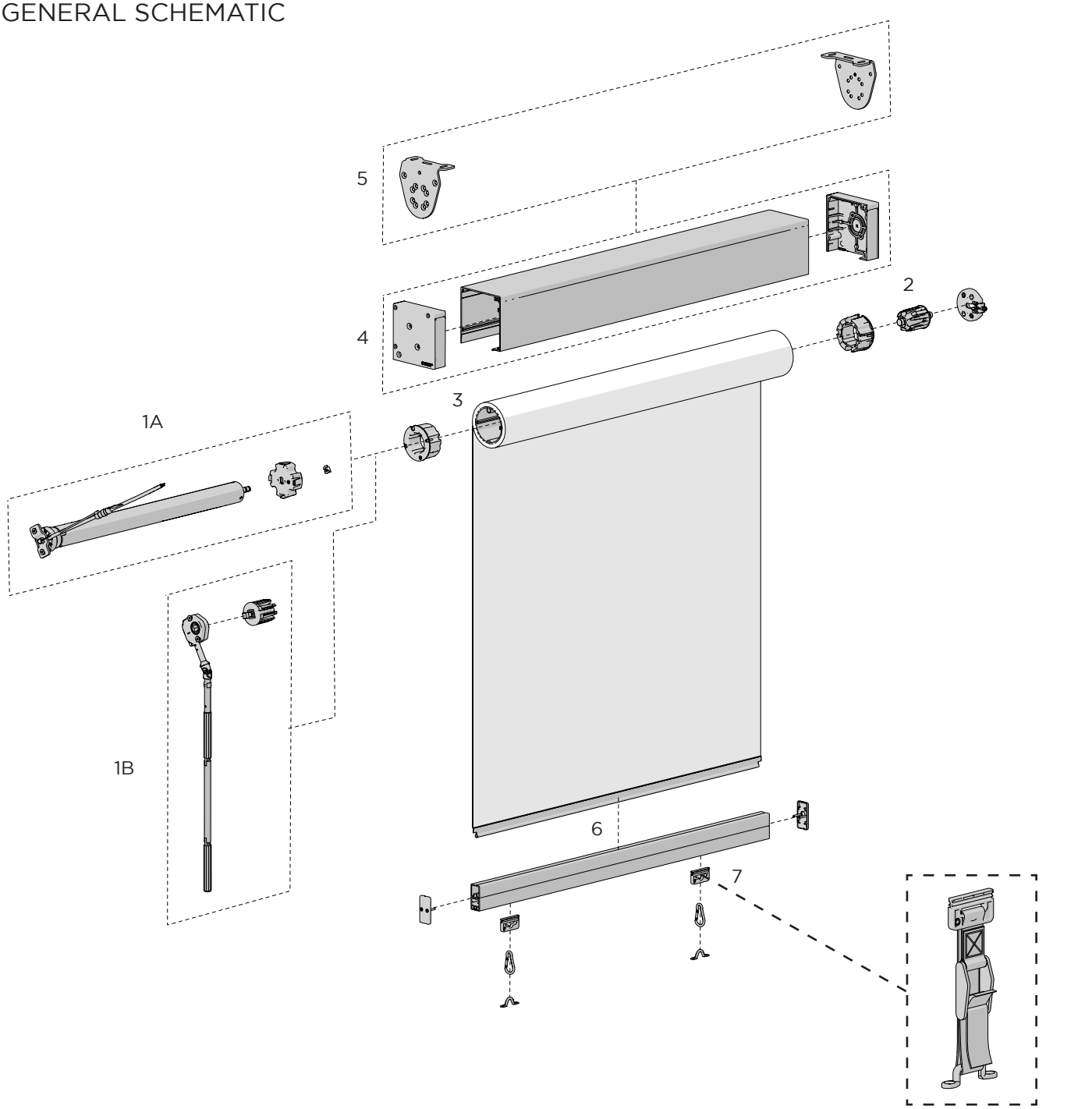

Strap Option Available

SYSTEM INDEX:

1. **CONTROLS:**
   - A - Motor
   - B - Crank
2. **IDLER**
3. **TUBE:** 78mm/110mm
4. **BOX:** 120/160
5. **BRACKETS:** Round/Extreme
6. **WEIGHT BAR:** F56/F72
7. **STRAP:** Spring Clip/Cam Buckle

© Copyright All Rights Reserved Rollease Acmeda

BOM & DEDUCTIONS

EXTERNAL SYSTEMS BOM & DEDUCTIONS

	PART NUMBER	DESCRIPTION	U.O.M	QTY	STRAIGHT DROP		
					78mm OPEN	BOX 120	BOX 160
BOX 120	RE01-0101-xxxLLL	Box 120 Back	mm (in)	1		W - 66 (2.60)	
	RE01-0102-xxxLLL	Box 120 Front Cover	mm (in)	1			
	RE01-0103-xxxLLL	Box 120 Semi Cover					
	RE01-1101-xxx120	Box 120 - End Plate Set	Set	1			
BOX 160	RE01-0111-xxxLLL	Box 160 - Top/Back Cover	mm (in)	1			
	RE01-0113-xxxLLL	Box 160 - Front Cover w/ Bubble	mm (in)	1			
	SB91-0022-050400	Fabric Brush - T-Slot 13mm x 4.8mm	mm (in)	2			
	RE01-1106-xxx160	Box 160 - End Plate Set	Set	1			
OPEN	RE01-3020-xxx000	Open Brackets | ROUND | Mild Steel	Set	1			
	RE01-3021-xxx000	Open Brackets | ROUND | Stainless Steel					
STRAIGHT DROP	RE91-1102-xxx025	25mm Strap Down Loop - Plastic	Piece	2			
	RE91-1104-xxx030	Strap Down Pad Eye Saddle – 30mm	Piece	2			
	RE91-1103-xxx050	Strap Down Spring Clip – 50mm	Piece	2			
	RE91-1101-013025	25mm Footman Loop - S/S	Piece	2			
	RE91-1111-013025	25mm Footman Loop - S/S w/ Screws | F72	Set	2			
	RE91-1105-009000	Flush Mount Strap Down Loop	Set	2			
	RE91-0100-025025	25mm Cam Buckle & Strap Assembly	Set	2			
GEAR	RE01-0513-xxx003	Gear 5:1 [7.5Nm] + Screws	Set	1			
	RE01-0517-xxx003	Gear 8:1 [20Nm] + Screws					
	RE01-0510-020000	RE01 Gear | Universal Joint	Piece	1			
	RE01-0502-050045	Crank Adaptor | 45mm	Piece	1			
	RB05-9102-xxx000	Gear/Crank Operation Arm Support	Piece	1			
	RB05-9101-xxxLLL	Gear/Crank Operation Control Arm - 100 / 150 / 200 cm	Piece	1			
MOTOR	MT01-1145-050001	AUTOMATE | ARC FT Motor | [Ø45/15Nm/15rpm] (AU)	Set	1			
	MT01-1145-050012	AUTOMATE | ARC FT Motor Long Conn. | [Ø45/15Nm/15rpm] (AU)					
	MT01-1145-069003	AUTOMATE | ARC FT SLIM Motor | [Ø45/15Nm/32rpm] (US)					
	MT01-1145-0690xx	AUTOMATE | ARC AX30 Motor (*Refer catalogue for Part #'s*)					
	MT01-1145-0690xx	AUTOMATE | ARC AX50 Motor (*Refer catalogue for Part #'s*)					
	MT01-1245-069001	AUTOMATE | DCFT 15Nm ARC Motor [Ø45/12V/10rpm]					
	MT03-0305-050011	AUTOMATE | 5.2Ah External Battery Pack	Set	1			
	Refer Catalogue.	AUTOMATE | Remotes, Sensors or Accessories	-	-			
	RE01-0603-025000	AUTOMATE | 45mm SLIM MOTOR 10mm Sq. Shaft (US)	Set	1			
	RE01-0601-025000	AUTOMATE | 45mm Motor Bracket Adaptor + Screws (US)	Set	1			
	MT03-0106-050006	AUTOMATE | 78mm Drive Wheel - Single Piece	Piece	1			
	MT03-0106-050005	AUTOMATE | Crown 45mm to 78mm Tube w/ Screws	Piece	1			
	MTCLIP-35-45	Motor Drive Clip for 35/45mm Motors (US)	Piece	1			
	RB56-0764-014050	Zamak Adaptor w/ Lock Ring & M6x12 Screws (*Box 160 SD/WG*)	Set	1			
	RB80-0301-073100	S100 - Universal Drive Wheel	Unit	1			
	RB80-0701-073100	S100 - Universal Motor Crown	Unit	1			
	MT03-0198-025008	AUTOMATE | 30Nm/50Nm Extreme Drive Shaft Adaptor	Set	1			
IDLER	RE01-0214-050000	Idler/Spring Adaptor MKII + Screws	Set	1			
	RE01-0215-050000	Box 160 - Extreme Idler Adaptor w/ Screws	Set	1			
	RB80-0202-073100	EXTREME Bearing Idler | Universal | S100	Unit	1			
	RE01-0213-050045	Bearing Idler | 45mm	Piece	1			
WEIGHT BAR OPTIONS	RE15-0101-xxxLLL	F56 HD Weight Bar	mm (in)	1	W - 70 (2.76)		78mm Tube: W - 70 (2.76) 110mm Tube: W - 92 (3.62)
	RE15-0112-xxxLLL	F72 Multi-Bar					
	RE15-0501-xxx000	F56 Plain End Cap w/ screws	Set	1			
	RE15-0540-050000	F72 Plain End Cap Set w/ screws	Set				
	SB91-1015-050200	F56 - 20 x 5mm Ballast x 2m (0.8kg/m) | Wrapped	mm (in)	0 - 4	W - 120 (4.72)		
	SB91-1018-050200	F72 - 25 x 8mm Ballast x 2m (1.6kg/m) | Wrapped					
TUBE PARTS	RE01-0377-000LLL	78mm STD V2 AL Tube w/ screw features	mm (in)	1	W - 68 (2.68)		
	RE01-0380-000LLL	78mm HD V2 AL Tube w/ screw features					
	RB93-0110-xxxLLL	S100 - 110mm AL Tube					W - 90 (3.54)
	RB80-0601-073110	S100 - STD Roller End Plate Pair - 110mm	Set	1			
FABRIC		Fabric Width	mm (in)	1	W - 70 (2.76)		78mm Tube: W - 70 (2.76) 110mm Tube: W - 92 (3.62)
	SB91-0409-050015	7mm Fabric Spline with 15mm tail | 100m roll		2			
		Fabric Drop		1	78mm Tube: D + 250 (9.84) 110mm Tube: D + 350 (14.57)		

© Copyright All Rights Reserved Rollease Acmeda

FABRIC PREPARATION

1. Cut fabric to size

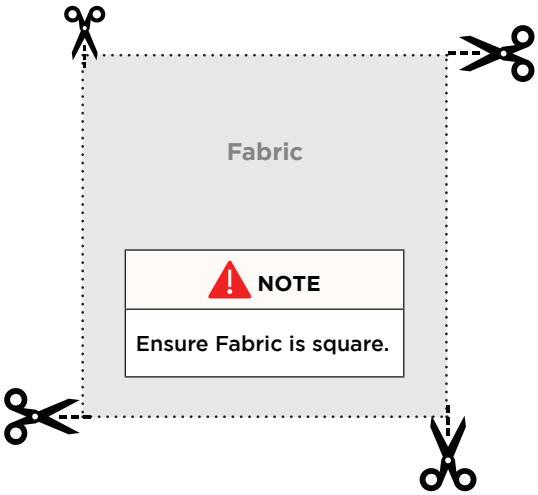

FABRIC TIPS:

Some fabric types should be used with caution as the weld quality can be problematic. Consult your fabric supplier for the recommended welding requirements of the following materials:

- Clear PVC
- Metallic backed
- Rubberised / foam backed
- Heavily textured / patterned
- Fabrics with bonding tapes (as fabric does not contain a plasticiser.

2. Weld fabric Spline to top & bottom edges

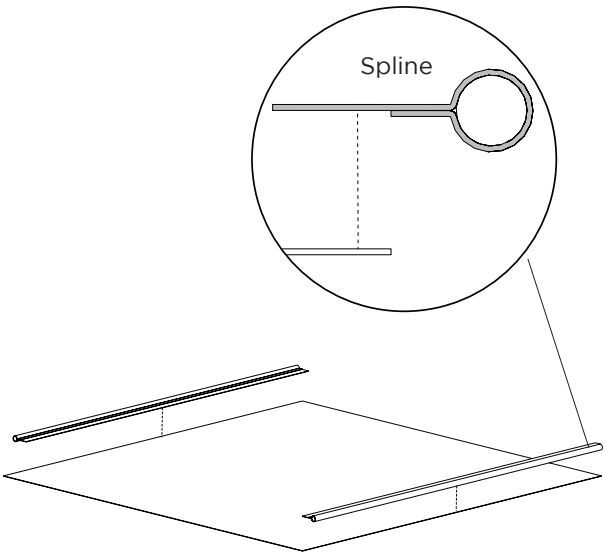

WELDING TIPS

- Ensure welding area and fabric is clean and free from dust and dirt. If dust and dirt is evident this will lead to sparking and burning of the fabric.
- Before welding your fabric, undertake weld testing on scrap pieces.
- If the temperature / amperage on the welding machine is too low, the weld will not bond the fabric properly, this is referred to as a 'cold weld'.
- If the temperature / amperage on the welding machine is too high, the fabric will burn.
- When using a High Frequency Welding Machine, ensure the welding overlap is at least 50mm. If the overlap is any shorter than this a 'cold weld' may occur at this area.
- For fabrics with a higher content of plastic in them, a higher-level sheen will be evident. When using a High Frequency Welding Machine and the fabric is overlapped to achieve a quality weld, the level of sheen on the fabric at this area will be reduced.

© Copyright All Rights Reserved Rollease Acmeda

BOX 120 / BOX 160

1 Remove ears from end plates on each side.

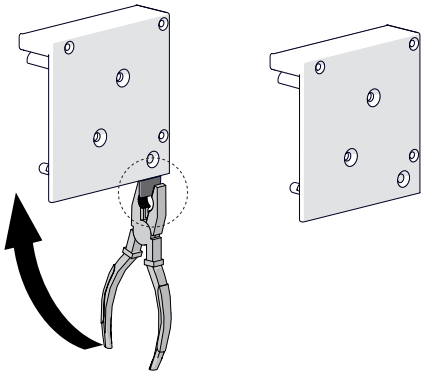

2 Remove end plate cover leg

This is only required:

- At one end when using a crank control.
- At both ends when using the Box 120 Semi Front Cover.

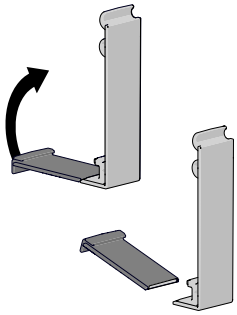

NOTE

It is advised that pliers are used to remove break-off & to clean the break with a file.

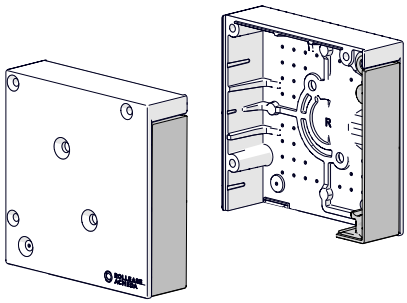

3 Attach control & Idler hardware

MOTOR CONTROL

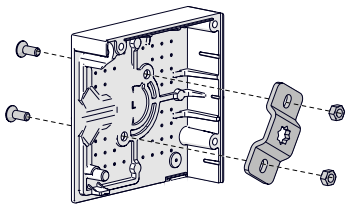

CRANK CONTROL

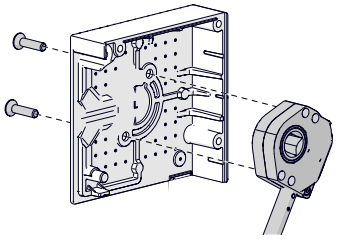

IDLER ADAPTOR

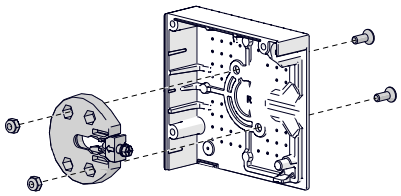

NOTE

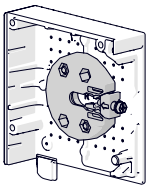

Install Retainer Clip in bracket adaptor so it doesn't get lost in transport.

© Copyright All Rights Reserved Rollease Acmeda

BOX 120 / BOX 160

4 **(Only for Box 160)**
4a. Insert brushes into the front and back covers..
4b. Ensure bubble seal is installed in Box 160 Front Cover.
The bubble seal is supplied assembled on powder coated extrusion, or loose for mill finish.
The bubble seal may be cut into separate pieces for ease of assembly.

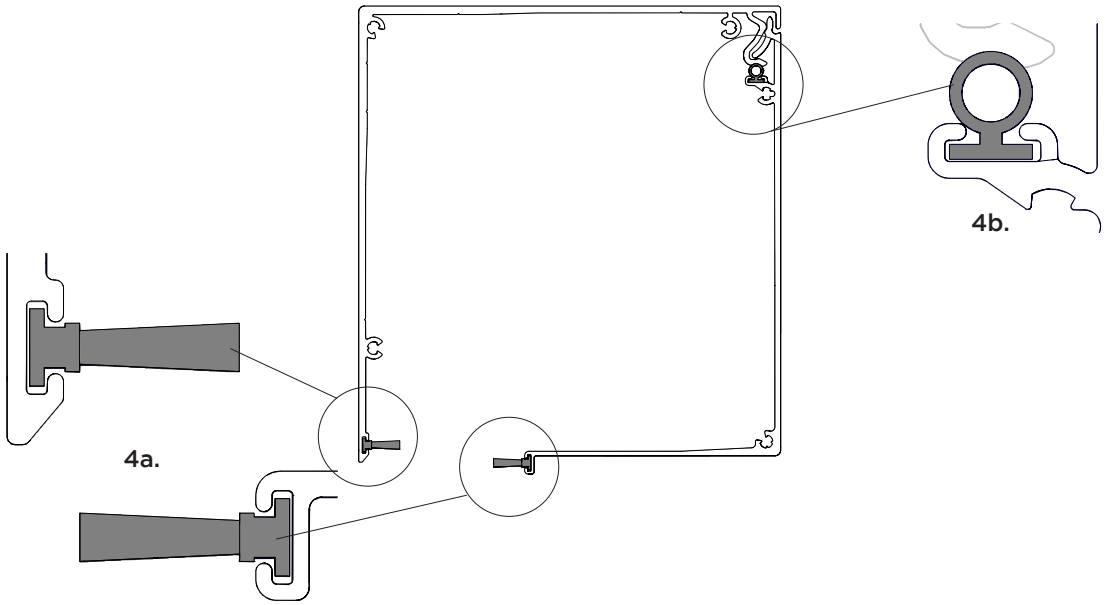

5 Attach end plates to box

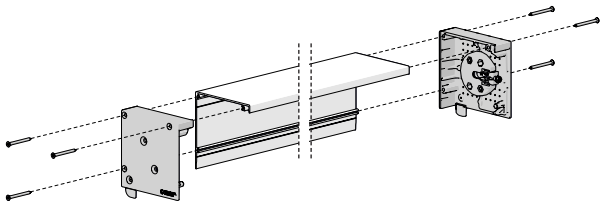

6 Attach 2x o-rings to each side

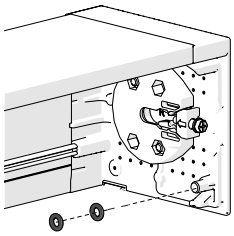

7 Attach front cover end plates

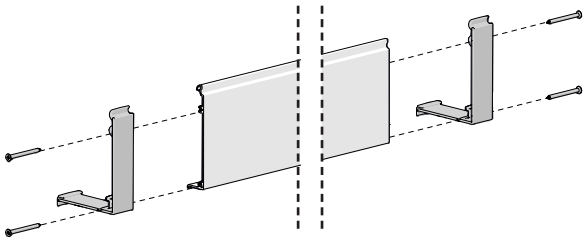

8 Attach front cover assembly to box assembly

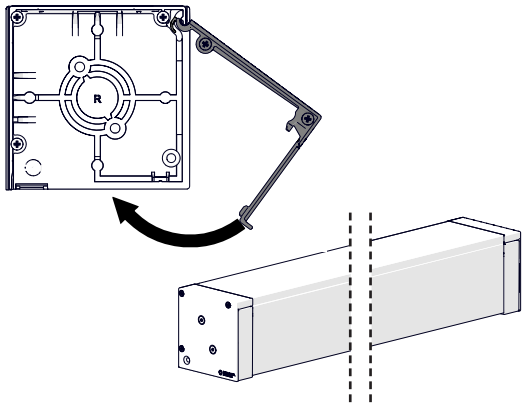

© Copyright All Rights Reserved Rollease Acmeda

ROLLEASE ACMEDA

OPEN BRACKETS | 78MM TUBE

1. Attach control hardware

MOTOR CONTROL

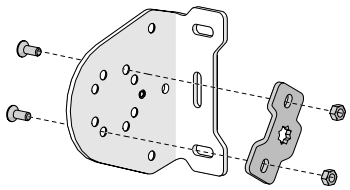

GEAR CONTROL

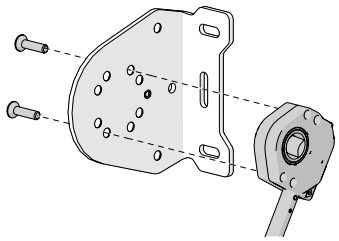

2. Attach Idler hardware

IDLER ADAPTOR

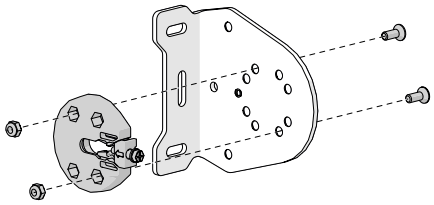

NOTE

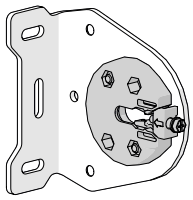

Ensure Idler opening is horizontal to installation orientation.

© Copyright All Rights Reserved Rollease Acmeda

CONTROL | MOTOR | 78MM TUBE

1. Assemble crown, drive and clip

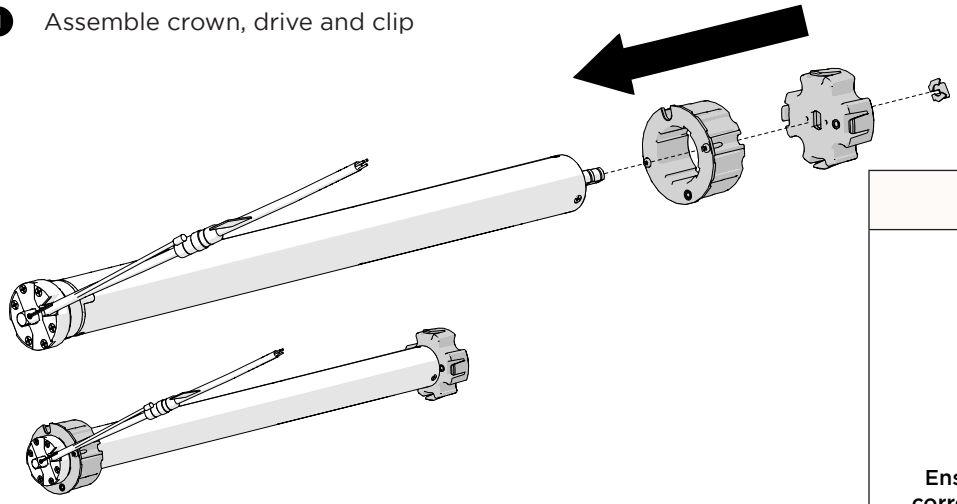

NOTE

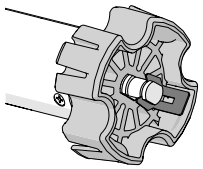

Ensure the clip is attached correctly with the drive shaft

2. Insert motor in tube and fasten crown in place

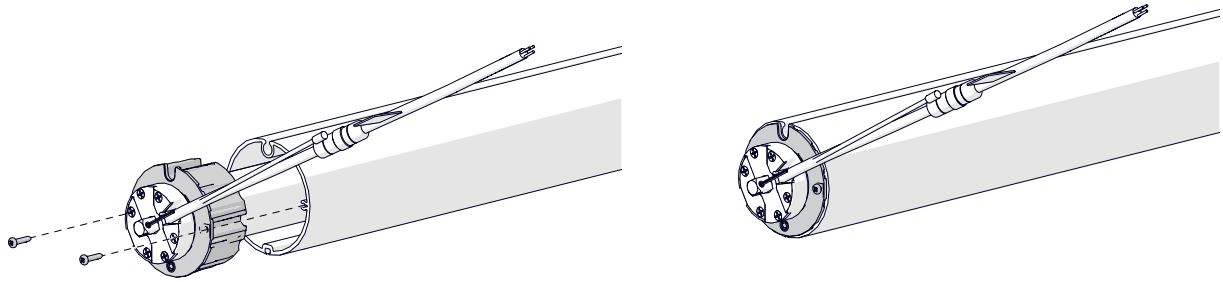

CONTROL | CRANK | 78MM TUBE

1. a. Insert crown into tube and fasten into place.
   b. Insert crank adaptor into crown until it locks into place.

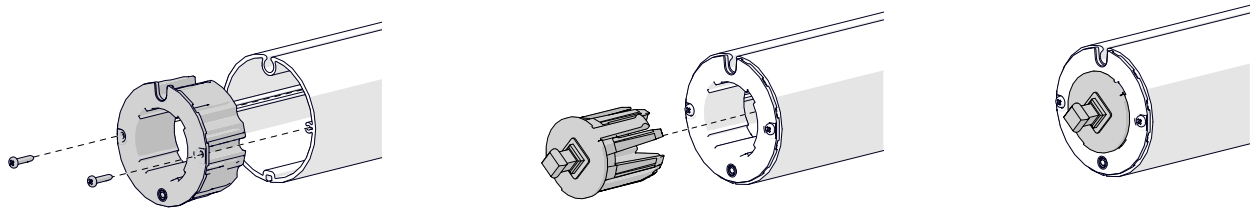

a. b.

2. a. Insert uni-joint into crank handle.
   b. Insert c-clip pin through shaft hole to secure uni-joint.

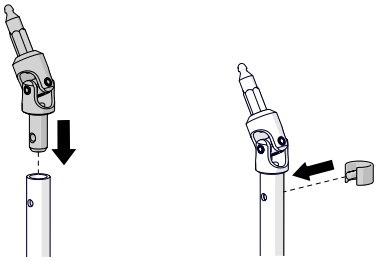

a. b.

© Copyright All Rights Reserved Rollease Acmeda

ROLLEASE ACMEDA

CONTROL | IDLER | 78MM TUBE

1. a. Insert crown into tube and fasten into place.
   b. Insert idler into crown until it locks into place.

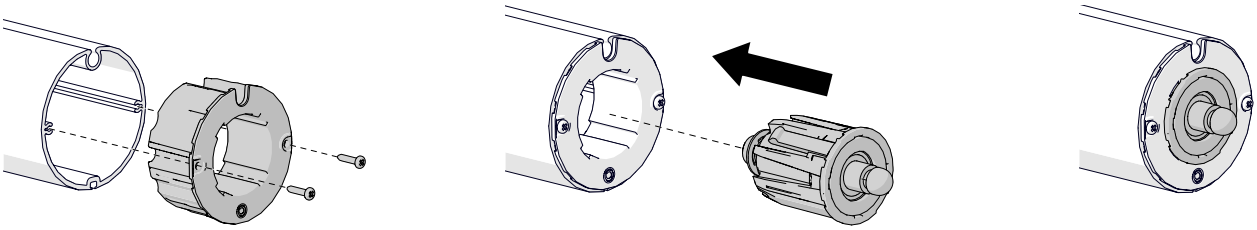

a. b.

FABRIC ASSEMBLY | 78MM TUBE

1. Insert fabric into tube

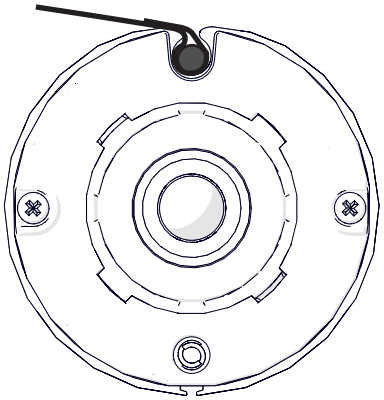

2. Roll fabric around tube

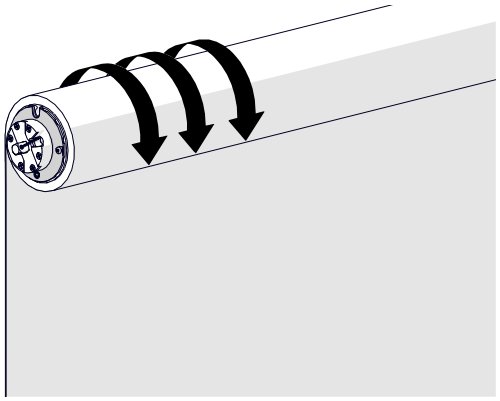

BOX 160 | 110MM TUBE

1. Attach control hardware

MOTOR CONTROL

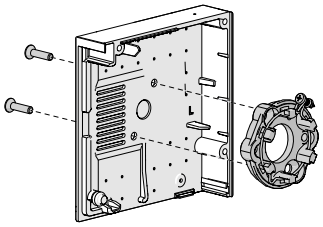

2. Attach Idler hardware

IDLER ADAPTOR

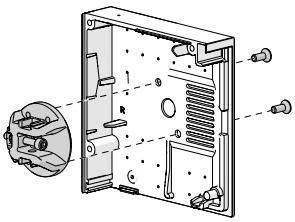

NOTE

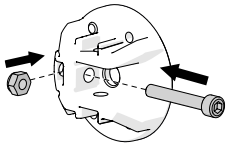

Assemble fasteners in idler adaptor so it doesn't get lost in transport.

© Copyright All Rights Reserved Rollease Acmeda

CONTROL | MOTOR | S100 TUBES

1. Assemble motor with crown, drive & adaptor kit

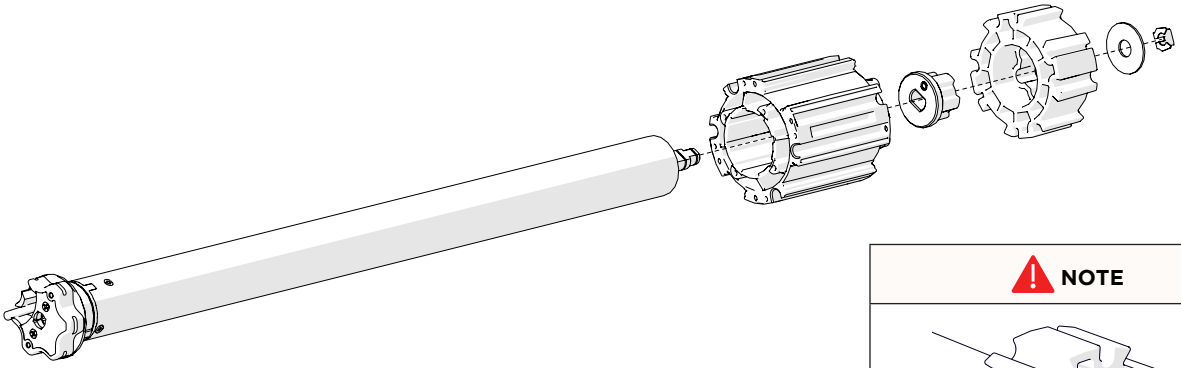

NOTE

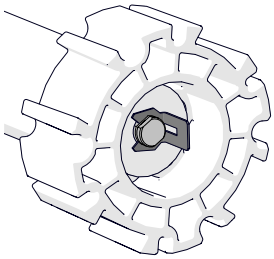

Ensure the clip is attached correctly with the drive shaft

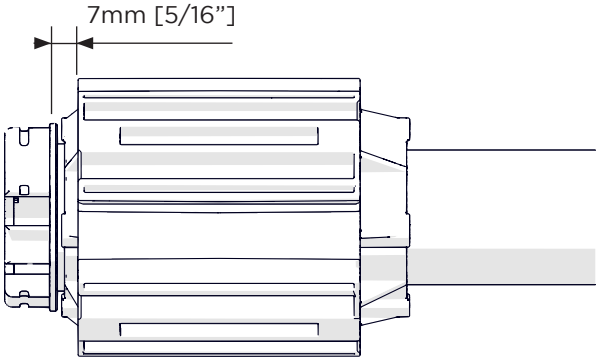

NOTE

Ensure crown is installed in the correct orientation for Wire Guide

VISUAL CHECK

☑ If using an AX Motor, ensure the crown is orientated correctly as shown below:

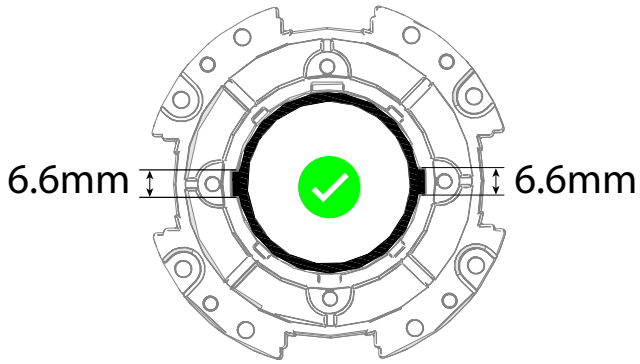

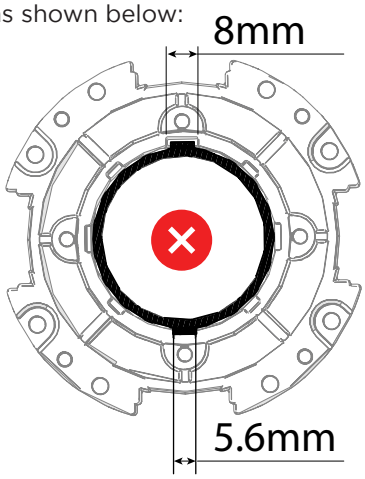

© Copyright All Rights Reserved Rollease Acmeda

ROLLEASE ACMEDA

CONTROL | MOTOR | S100 TUBES

1. Insert motor assembly into tube & fasten end plate in place

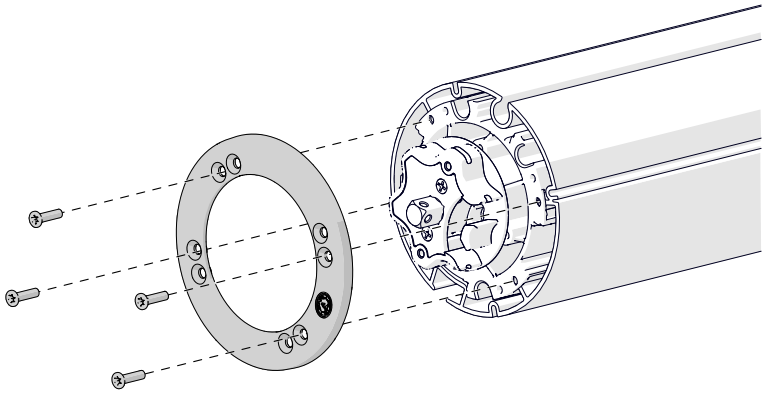

2. Secure drive wheel to tube with counter sunk screw

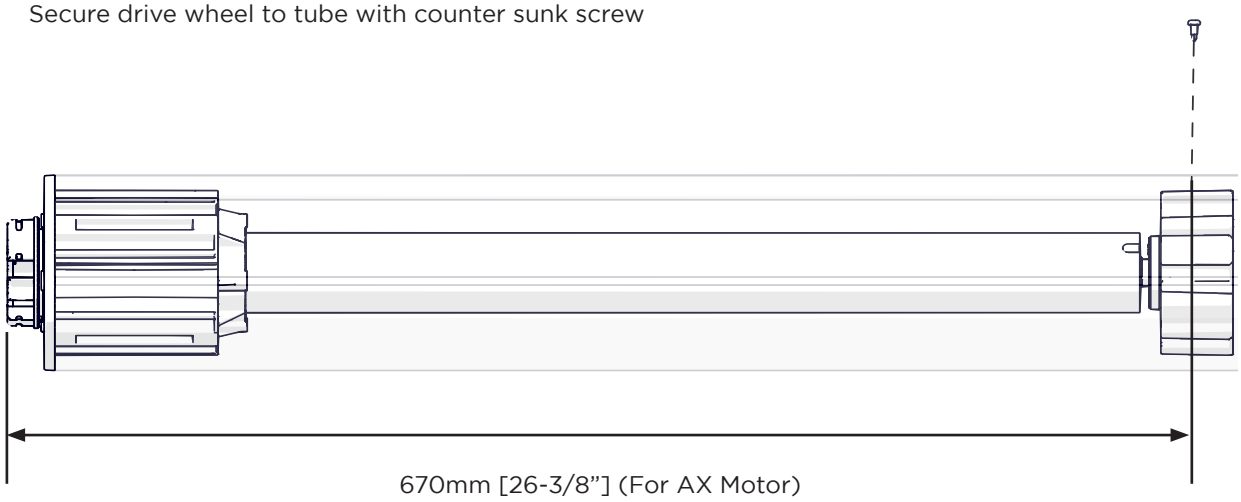

Hole = Ø4.5mm (0.18”)
Screw = #8 x 1/2”

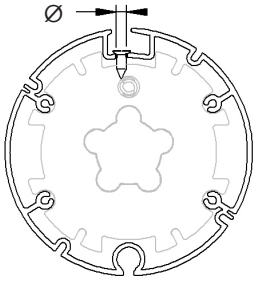

© Copyright All Rights Reserved Rollease Acmeda

FABRIC ASSEMBLY | S100 TUBES

1. Insert fabric into tube

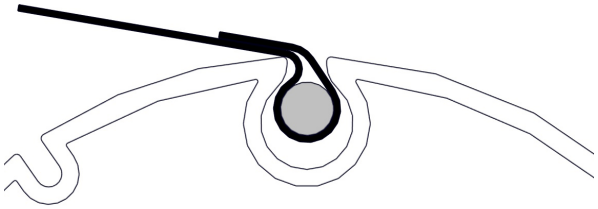

2. Insert idler into tube, ensure correct idler orientation

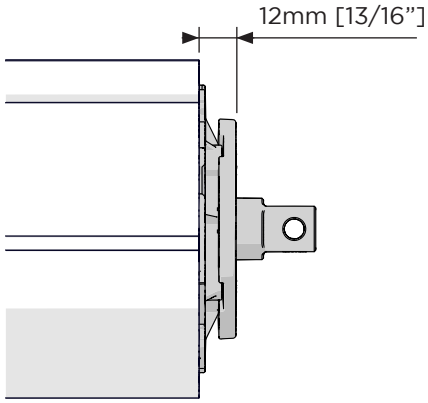

3. Fasten end plate in place

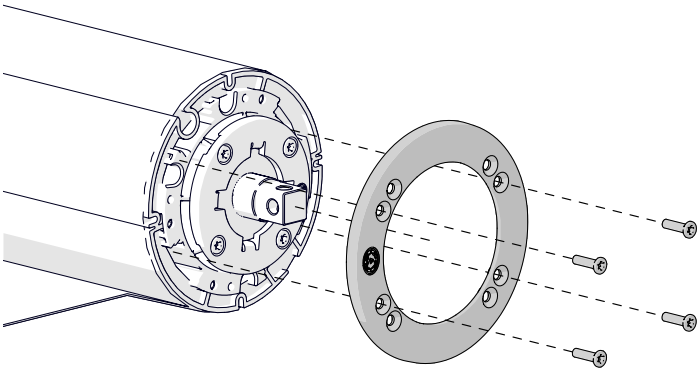

4. Roll fabric around tube

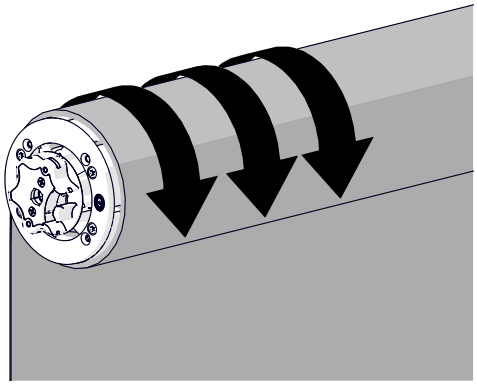

© Copyright All Rights Reserved Rollease Acmeda

WEIGHT BAR ASSEMBLY

1. Slide weight bar onto fabric

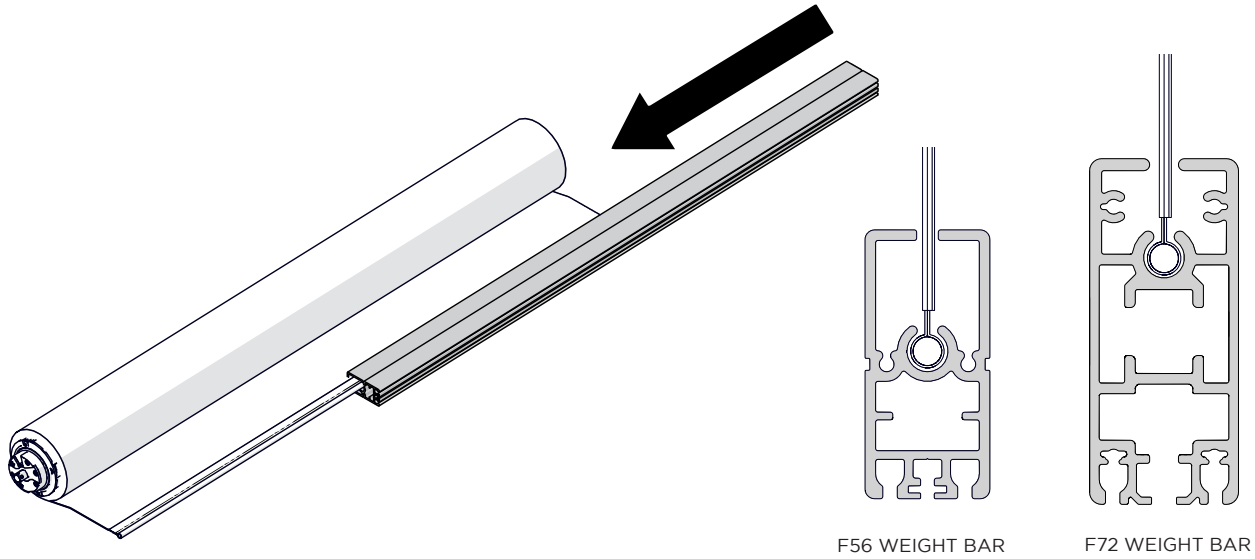

2. Insert end caps

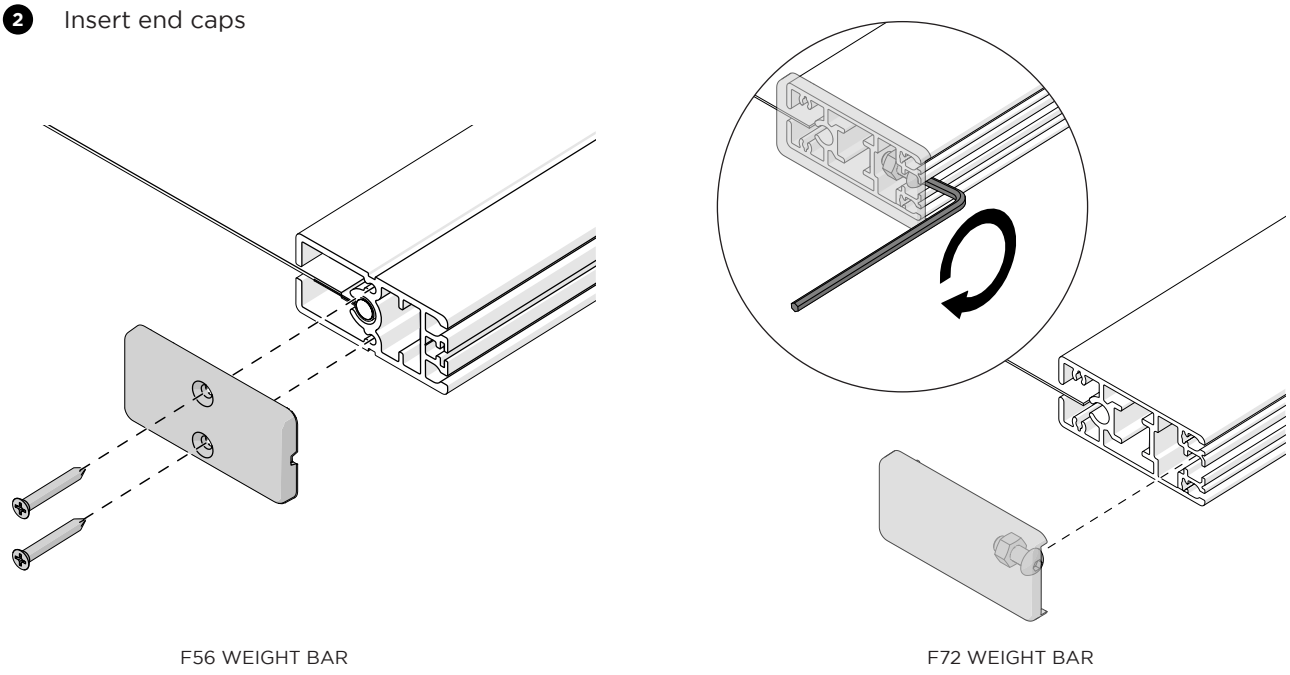

© Copyright All Rights Reserved Rollease Acmeda

WEIGHT BAR ASSEMBLY (Continued)

3 Insert ballast (if required)

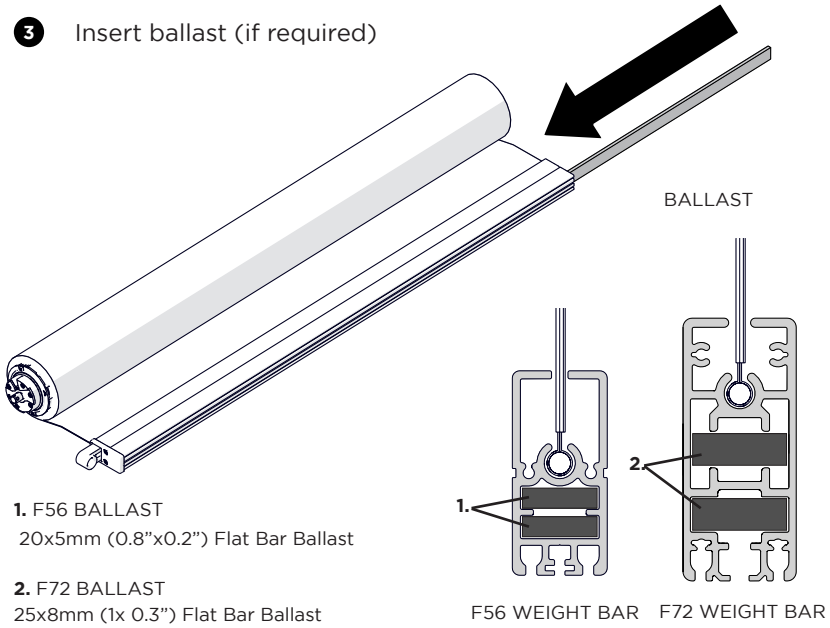

1. F56 BALLAST
20x5mm (0.8”x0.2”) Flat Bar Ballast

2. F72 BALLAST
25x8mm (1x 0.3”) Flat Bar Ballast

NOTE

- **Ballast is recommended in all motorized and crank control shades.**
- **If the ballast has been cut to size, use a Zinc-rich primer to protect the cut edges from corrosion.**
- **If using ballast on shades wider than 4m, only put the ballast on the outside edges.**
- **Max 2x lengths per ballast opening, total maximum of 4x lengths per weight bar.**
- **Extra ballast in the centre will create additional tube deflection.**

4 Insert strap down loop

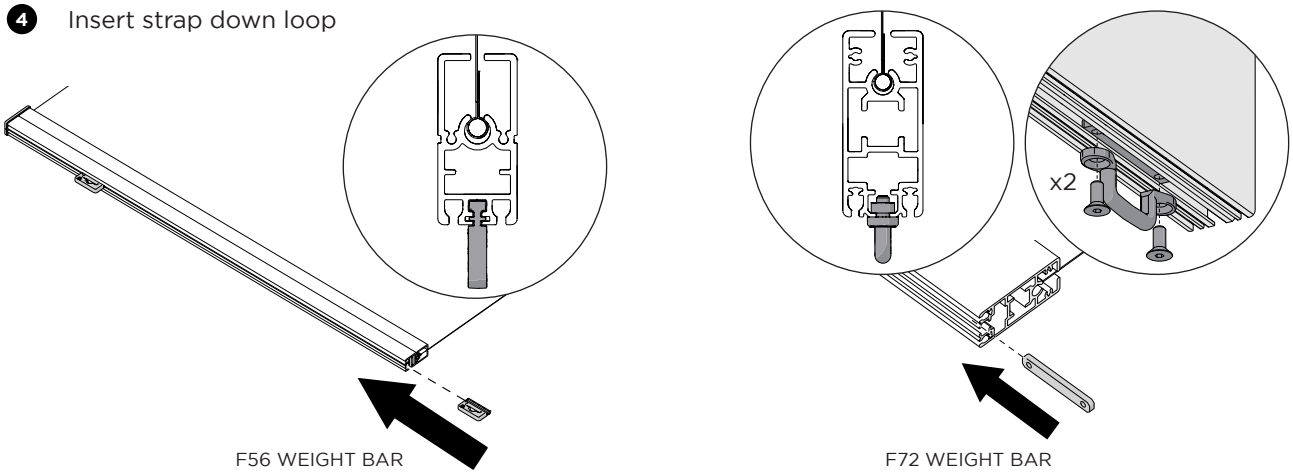

5 Attach end caps

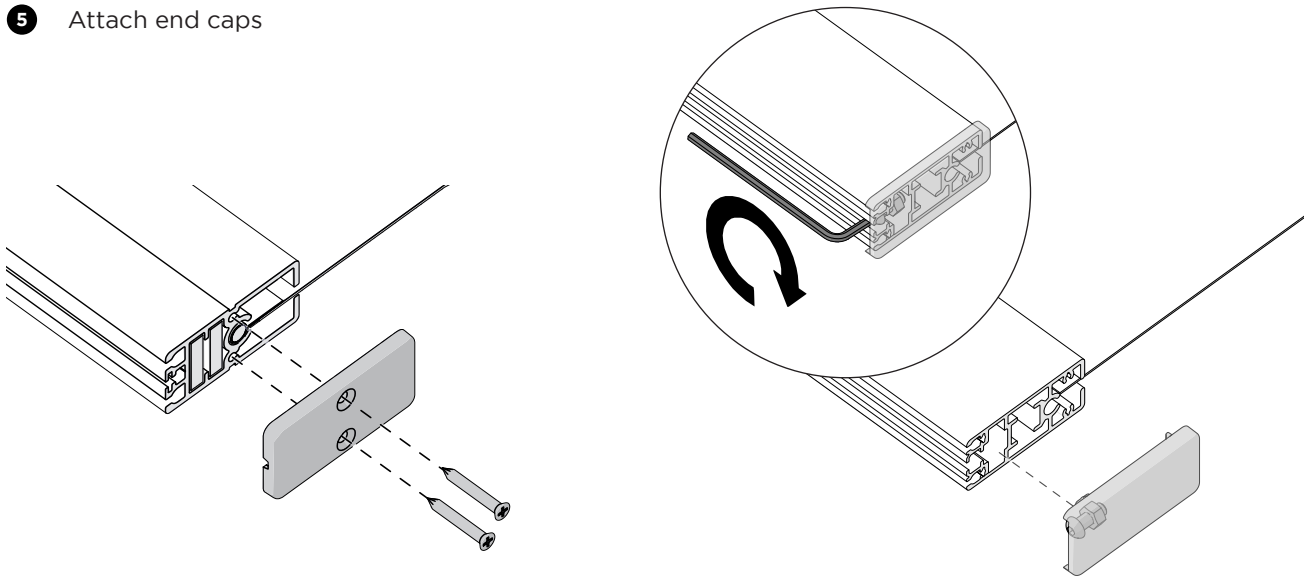

© Copyright All Rights Reserved Rollease Acmeda

ROLLEASE ACMEDA

PREPARE & PACK FOR TRANSPORTATION

Note: Images shown below are indicative only and will vary with system requirements.

Box 120

Box 160

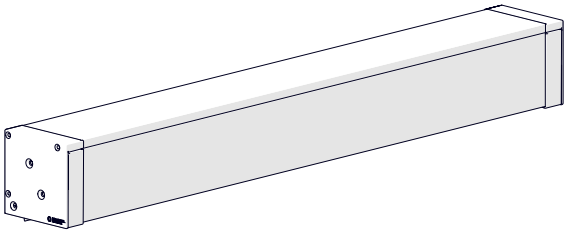

OR

Open Brackets

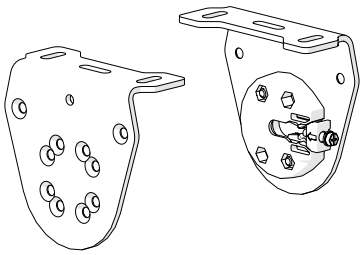

NOTE

Store idler/spring adapter retaining clip until required (can be left in adaptor as shown)

Blind

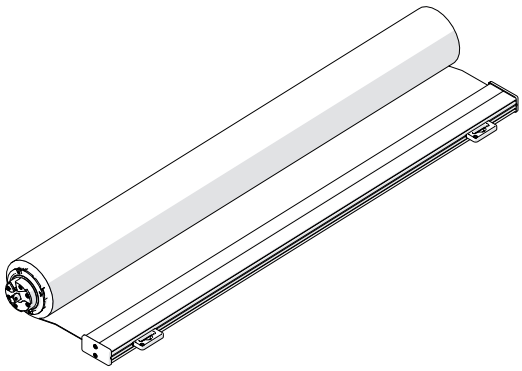

Strap Down Hardware

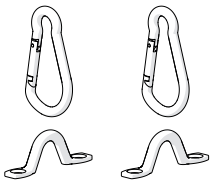

OR

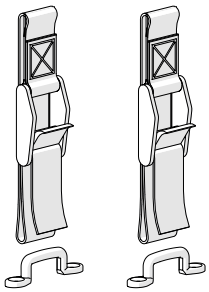

© Copyright All Rights Reserved Rollease Acmeda

APPENDIX A: DOCUMENT CHANGE NOTES

REVISION	CHANGES
v2.3 | August 2022	Removed coating specifications (moved to separate document). Removed 63mm hardware. Removed Standard Idler. Updated Weight Bar & Fabric deductions to minimise light gap and reduce exposed tube. (see page 6, 7)
v2.4 | September 2023	Updated crank adaptor in images. Updated BoM & Deductions Tables.
v2.5 | June 2025	Updated BoM and fixed assembly illustrations.

© Copyright All Rights Reserved Rollease Acmeda