SS38

INSTALLATION MANUAL

ROLLEASE ACMEDA
PRECISION IN MOTION

CONTENTS

SECTION A | ITEMS REQUIRED 01

AVAILABLE IN US, AU, EU 01

AVAILABLE IN AU, EU ONLY 01

SECTION B | INSTALLATION 02

INSTALLATION - LOW PROFILE MOUNTING CLIPS - US, AU, EU 02

INSTALLATION - SPRING LOADED MOUNTING CLIPS - AU, EU 04

SECTION C | SHADE REMOVAL 06

SHADE REMOVAL - LOW PROFILE MOUNTING CLIPS 06

SHADE REMOVAL - SPRING LOADED MOUNTING CLIPS - AU, EU 07

SECTION D | CORD REPLACEMENT 08

SLIM SPOOL 08

SECTION E | TROUBLE SHOOTING 09

DISCLAIMER

INTRODUCTION

This Product Specifications manual for SS38 Systems has been produced by Rollease Acmeda to supply the necessary information for the safe and correct installation of SS38 Systems.

DISCLAIMER

Rollease Acmeda has used reasonable care in preparing the information included in this document, but makes no representations or warranties as to the completeness or accuracy of the information. Information is supplied upon the condition that the persons receiving the information will make their own determination as to its suitability for their purposes prior to use. Rollease Acmeda assumes no liability whatsoever for any damages incurred by you resulting from errors in or omissions from the information included herein. Rollease Acmeda reserves the right to make changes without further notice to any products to improve reliability, function or design.

COPYRIGHT

COPYRIGHT © ROLLEASE ACMEDA

All rights are reserved. No part of this document may be reproduced or utilised in any means, by any means, electronic or mechanical including photocopying, recordings, or by any information storage or retrieval system, without the express permission from Rollease Acmeda.

ROLLEASE ACMEDA

SECTION A | ITEMS REQUIRED

AVAILABLE IN US, AU, EU

SS38 - LOW PROFILE MOUNTING CLIPS

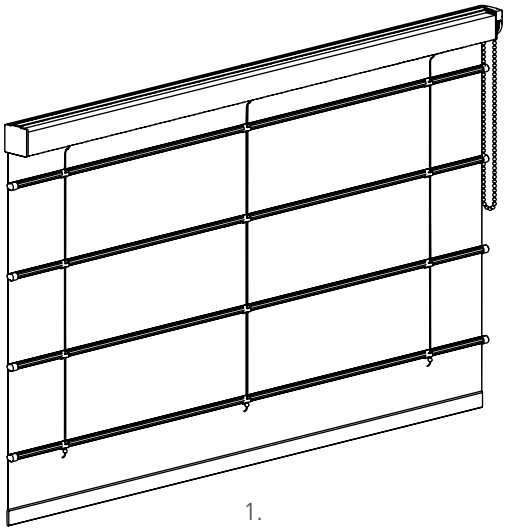

1.

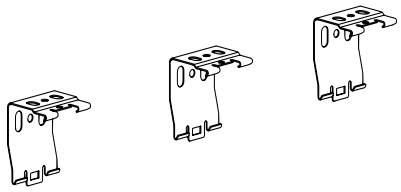

2.

SYSTEM INDEX

1. Assembled SS38 Roman Shade
2. Low Profile Mounting Clips

AVAILABLE IN AU, EU ONLY

SS38 - SPRING LOADED MOUNTING BRACKETS

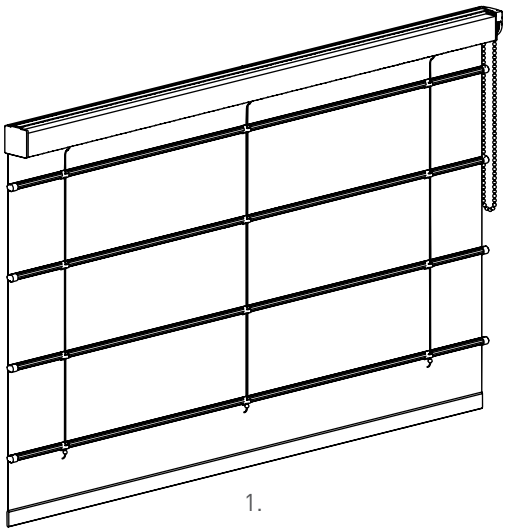

1.

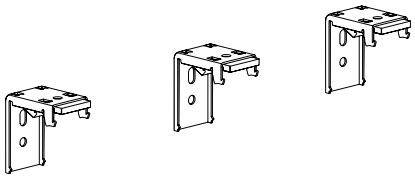

2.

SYSTEM INDEX

1. Assembled SS38 Roman Shade
2. Spring Loaded Mounting Brackets [AU + EU only]

2018 ©Copyright All Rights Reserved Rollease Acmeda

INSTALLATION - LOW PROFILE MOUNTING CLIPS - US, AU, EU

STEP 1. - ATTACH MOUNTING CLIPS TO WALL/CEILING

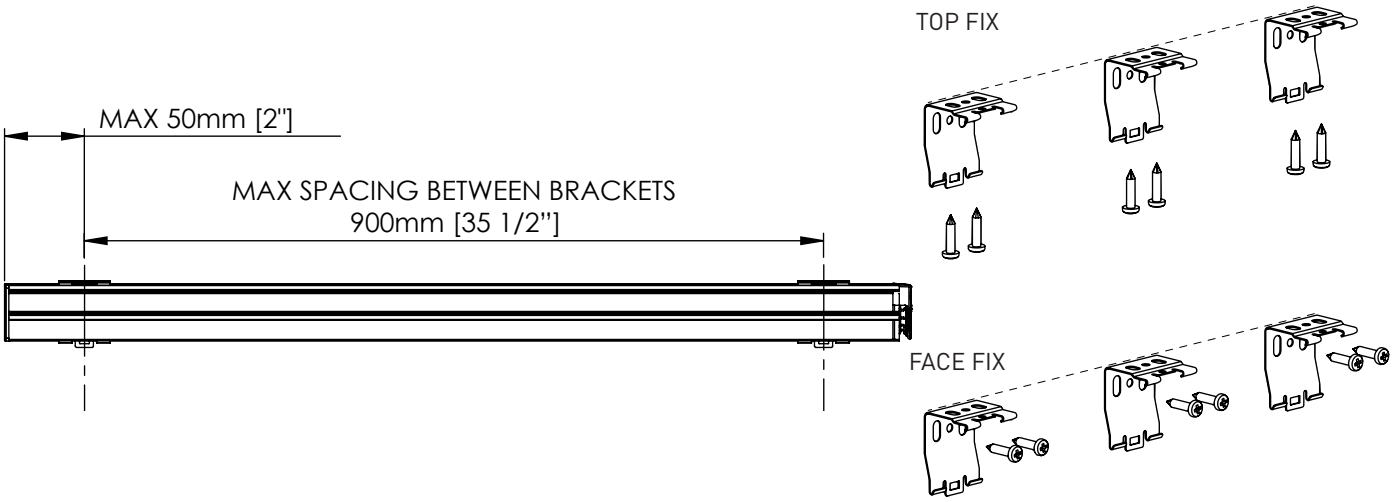

STEP 2. - ADJUST AS REQUIRED

Slight adjustment is available:

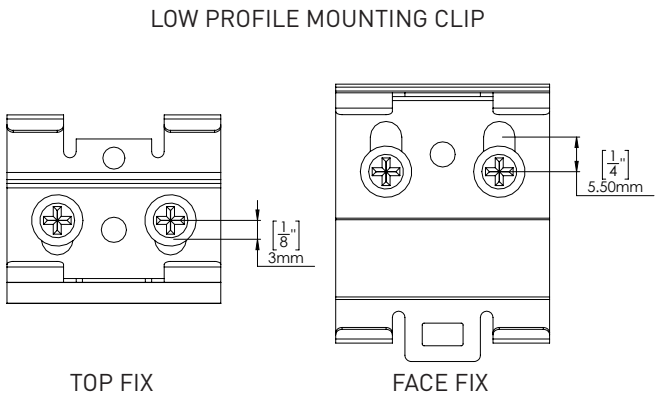

STEP 3. - ENSURE STRAIGHT ALIGNMENT

Ensure mounting clips are in line

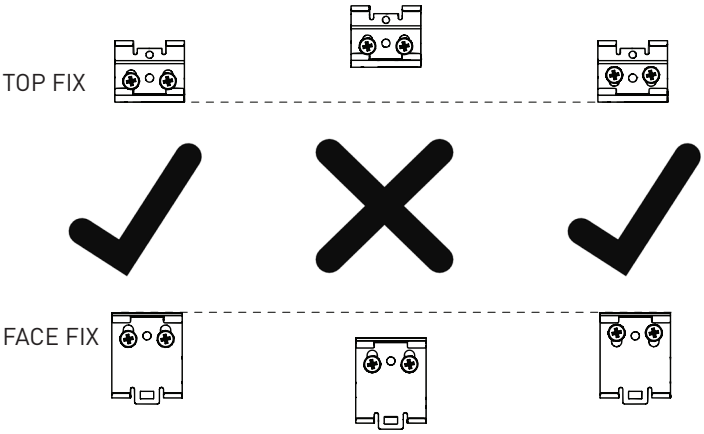

STEP 4. - INSTALLATION POSITIONING

For touch fabric appliaction: To make installation of the shade easier, lift the shade to the raised position & temporarily take the fabric off the head rail.

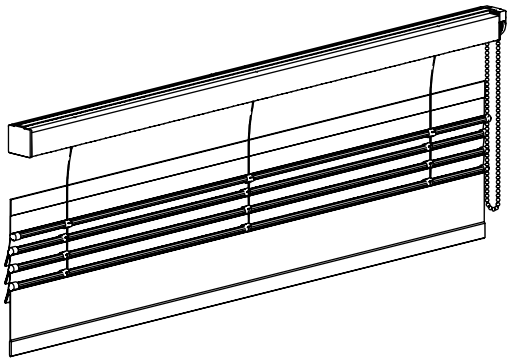

2018 ©Copyright All Rights Reserved Rollease Acmeda

INSTALLATION - LOW PROFILE MOUNTING CLIPS

STEP 5. - ATTACH HEAD RAIL TO MOUNTING CLIPS

Mount the shade assembly onto the Mounting Clips.

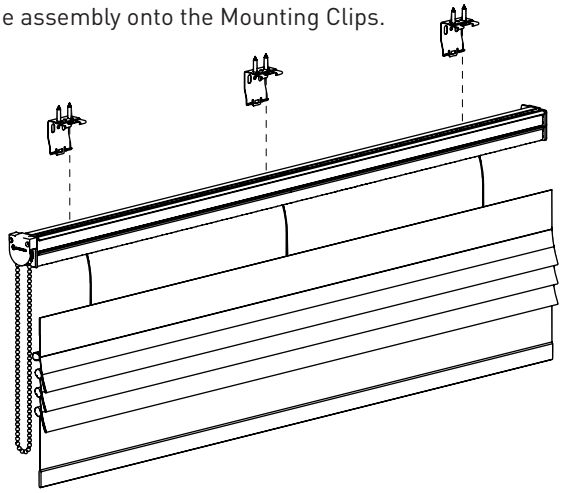

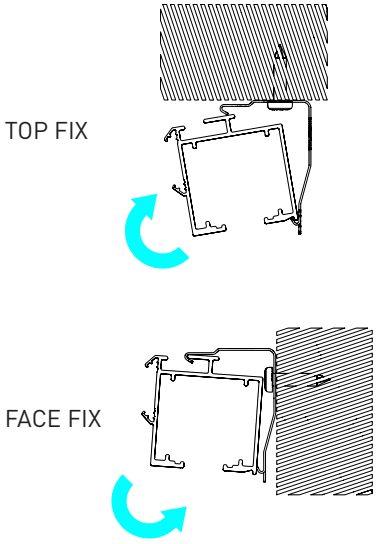

NOTE: Top Fix shown as example. Also applies to Face Fix.

STEP 6. - ATTACH HEAD RAIL TO MOUNTING CLIPS (COMPLETE)

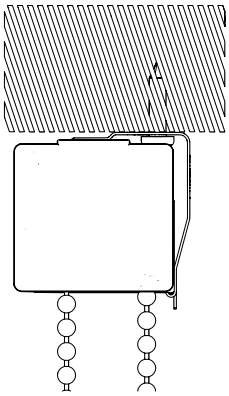

TOP FIX

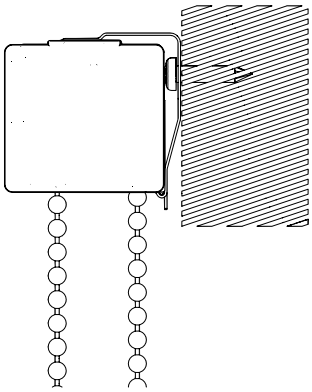

FACE FIX

STEP 7. - RE-ATTACH FABRIC FOR TOUCH FABRIC APPLICATION

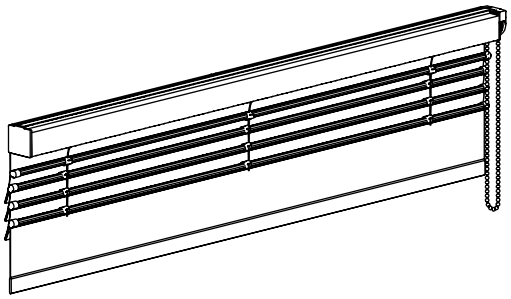

STEP 8. - INSTALL CHAINHOLD TENSION DEVICE

Cords on window coverings present a potential stragulation hazard. For Child Safety, Rollease Acmeda offers a range of Chainhold Tension Devices. The Chainhold Tension Device provides child safe tension mechanism for a chain roller system. Unless properly installed, the Chainhold Tension Device will partially prevent the window covering from functioning, making it fully compliant with the ANS/WCMA standard for safety.

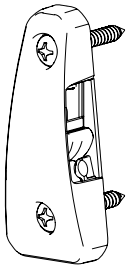

2018 ©Copyright All Rights Reserved Rollease Acmeda

INSTALLATION - SPRING LOADED MOUNTING BRACKETS - AU, EU

STEP 1. - ATTACH MOUNTING BRACKETS TO WALL/CEILING/HEAD BOARD

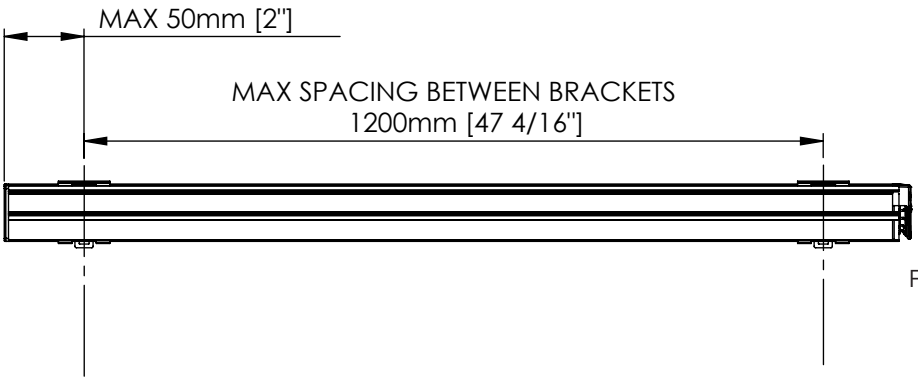

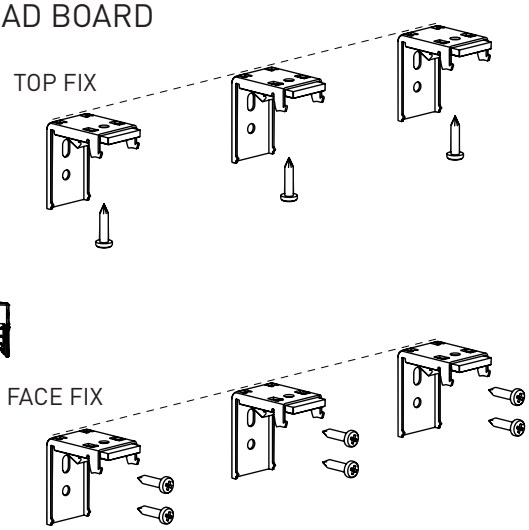

STEP 2. - ADJUST AS REQUIRED

Slight adjustment is available:

SPRING LOADED

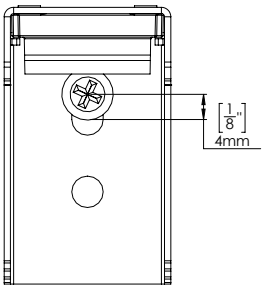

FACE FIX
(cannot adjust top fix)

STEP 3. - ENSURE STRAIGHT ALIGNMENT

Ensure mounting clips are in line

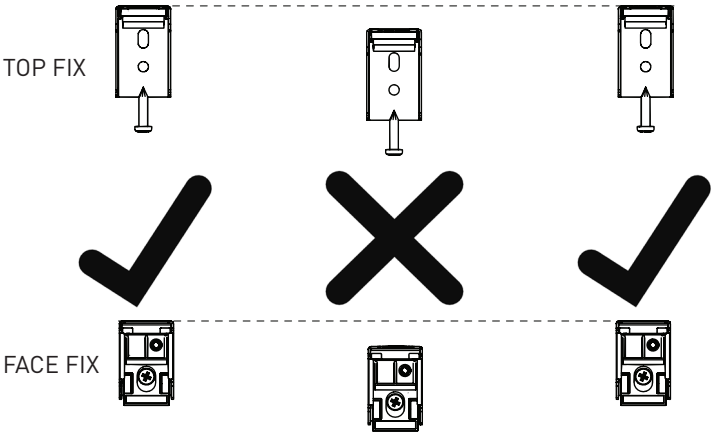

STEP 4. - INSTALLATION POSITIONING

For touch fabric appliaction: To make installation of the shade easier, lift the shade to the raised position & temporarily take the fabric off the head rail.

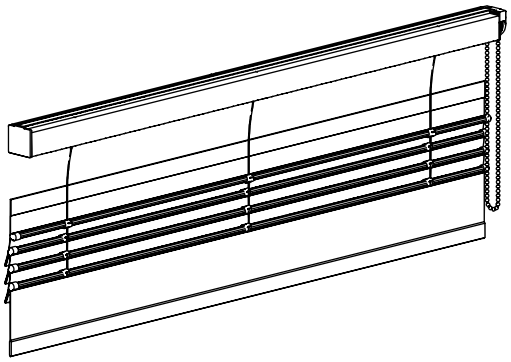

2018 ©Copyright All Rights Reserved Rollease Acmeda

ROLLEASE ACMEDA

INSTALLATION - SPRING LOADED MOUNTING CLIPS - AU, EU

STEP 5. - ATTACH HEAD RAIL TO MOUNTING BRACKETS

Mount the shade assembly onto the Mounting Brackets.

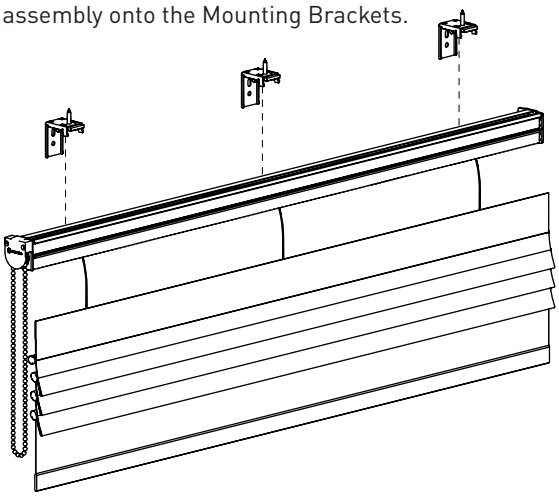

SAME FOR TOP FIX & FACE FIX

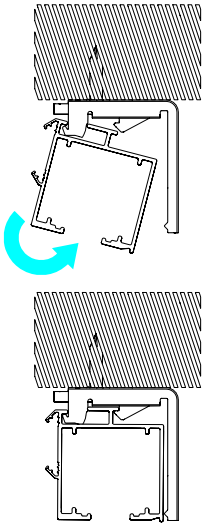

NOTE: Top Fix shown as example. Also applies to Face Fix.

STEP 6. - ATTACH HEAD RAIL TO MOUNTING BRACKETS (COMPLETE)

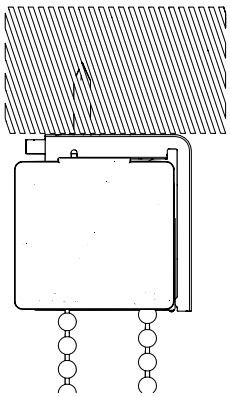

TOP FIX

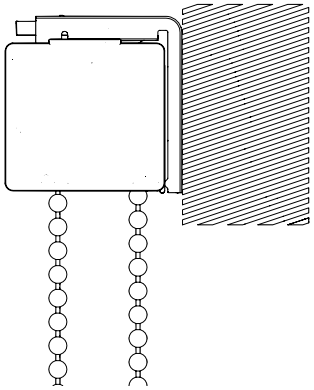

FACE FIX

STEP 7. - RE-ATTACH FABRIC FOR TOUCH FABRIC APPLICATION

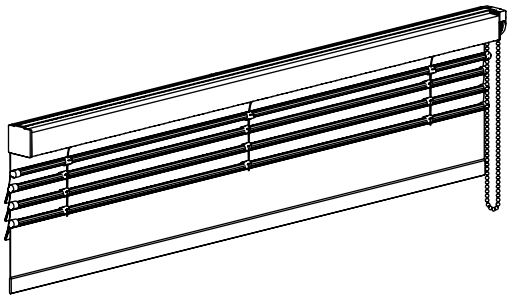

STEP 8. - INSTALL CHAINHOLD TENSION DEVICE

Cords on window coverings present a potential stragulation hazard. For Child Safety, Rollease Acmeda offers a range of Chainhold Tension Devices. The Chainhold Tension Device provides child safe tension mechanism for a chain roller system. Unless properly installed, the Chainhold Tension Device will partially prevent the window covering from functioning, making it fully compliant with the ANS/WCMA standard for safety.

2018 ©Copyright All Rights Reserved Rollease Acmeda

SHADE REMOVAL - LOW PROFILE MOUNTING CLIPS

STEP 1. - DISENGAGE ORDER

Disengage clips at each end first

Disengage middle clip/s and remove shade

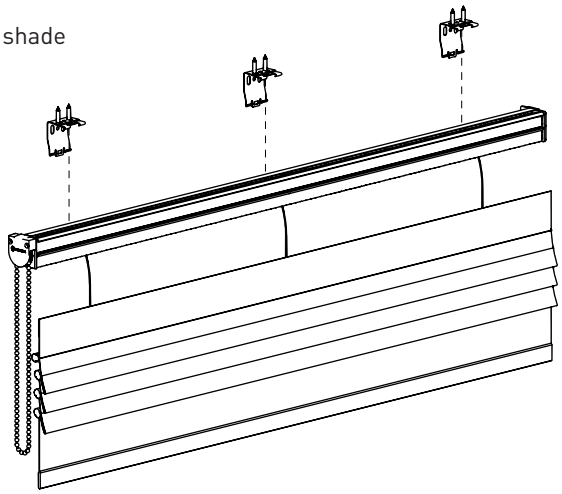

OPTION 1. - TOUCH TAPE APPLICATION

Remove fabric from head rail to access mounting clip

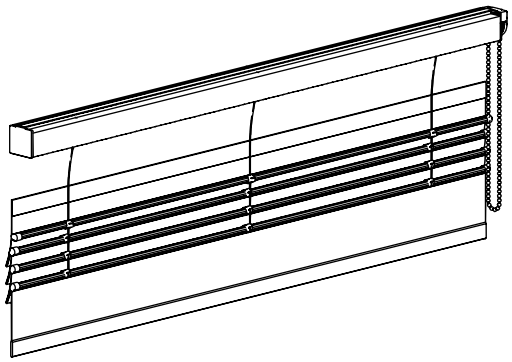

While bracket is flexing, apply force to twist extrusion off bracket

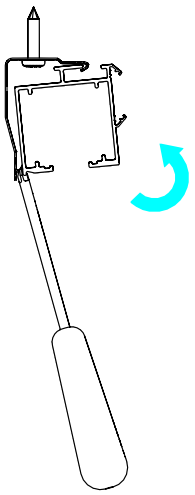

OPTION 2. - SPLINE APPLICATION

If fabric is splined, reach in behind shade to disengage brackets

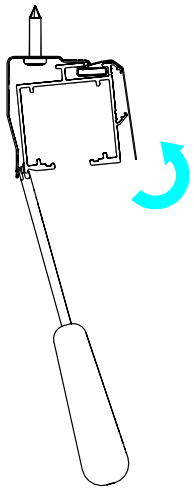

2018 ©Copyright All Rights Reserved Rollease Acmeda

SHADE REMOVAL - SPRING LOADED MOUNTING CLIPS - AU, EU

STEP 1. - REMOVE FABRIC FROM HEAD RAIL TO ACCESS MOUNTING CLIPS

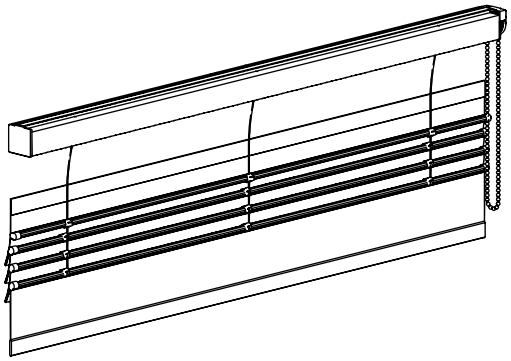

STEP 2. - DISENGAGE ORDER

Disengage clips at each end first

Disengage middle clip/s and remove shade

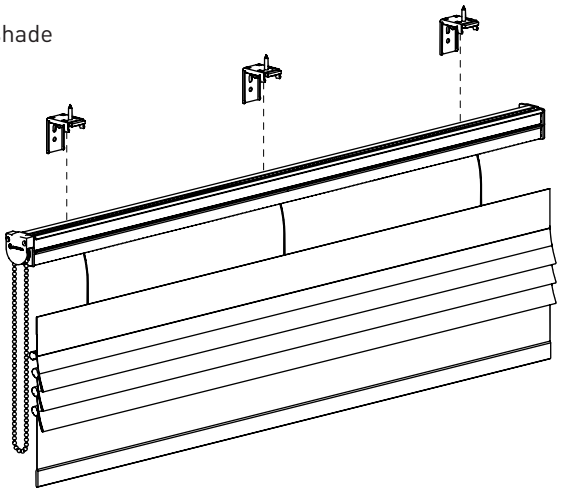

STEP 3. - DISENGAGE BRACKETS

Press the center plastic relase of mounting clip with finger to disengage from head rail

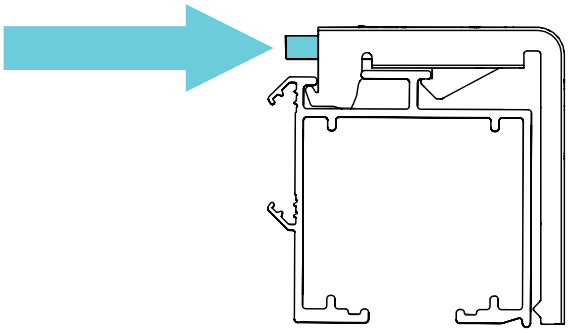

2018 ©Copyright All Rights Reserved Rollease Acmeda

SLIM SPOOL

STEP 1. - REMOVE DAMAGED CORD FROM GUIDE

Remove damaged cord from spool cord guide and pull out notch

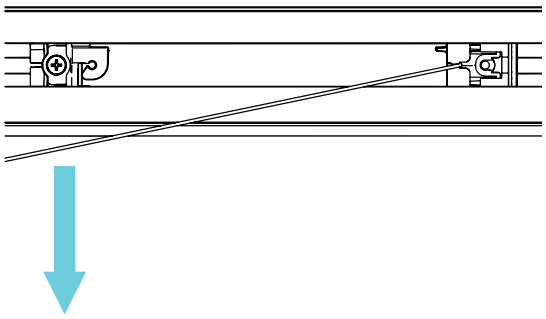

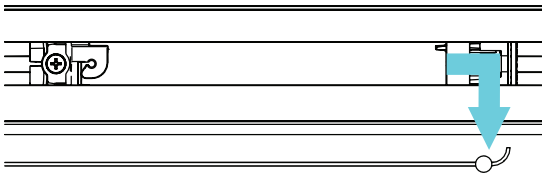

STEP 2. - ENSURE CORD NOTCH IS VISIBLE

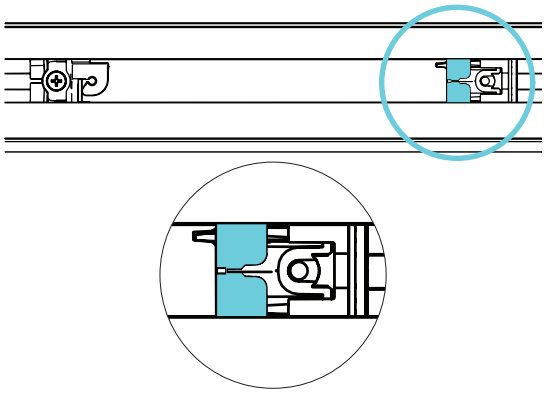

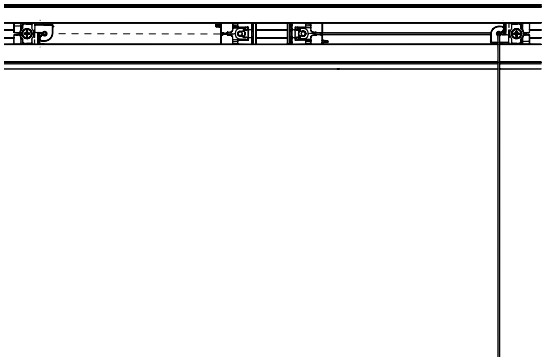

STEP 3. - TIE A KNOT AT THE END OF CORD, INSERT INTO NOTCH & PULL

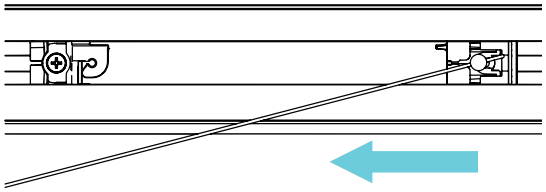

STEP 4. - RUN CORD INTO GUIDE & PULL UP

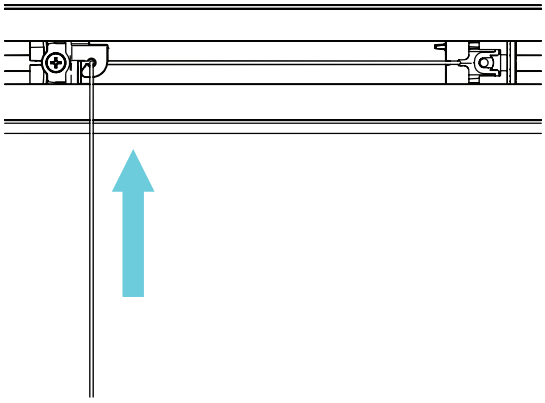

2018 ©Copyright All Rights Reserved Rollease Acmeda

ROLLEASE ACMEDA

PROBLEM	CAUSE	SOLUTION
Uneven shade	Cord not running straight down	Make sure cord outlet of spool is aligned with cord clips on battens
	Cord in spool not aligned to start with	Make sure cords on every spool are aligned horizontally to ensure they wind down evenly
	Cord knots are uneven	Ensure the cord knots tied off at the bottom are even lengths and sit level and tight against the last batten
	Cord has overlapped in spool	Check the cord is spooling evenly along when wound. If the cord has overlapped itself, bring the shade all the way down then back up again to reset the cord
Cord loops seen below fabric	Cords are too long	Ensure the cord knots tied off at the bottom are even lengths and sit level and tight against the last batten
Noisy operation	Spool spacing is too great	Make sure you have enough spool across the length of the shade. This will stop any possible sagging between spools
	Spool not secure	Ensure all the spools are secured tightly to the head rail
	Rod deformed	Ensure the rod is straight and not deformed

2018 ©Copyright All Rights Reserved Rollease Acmeda