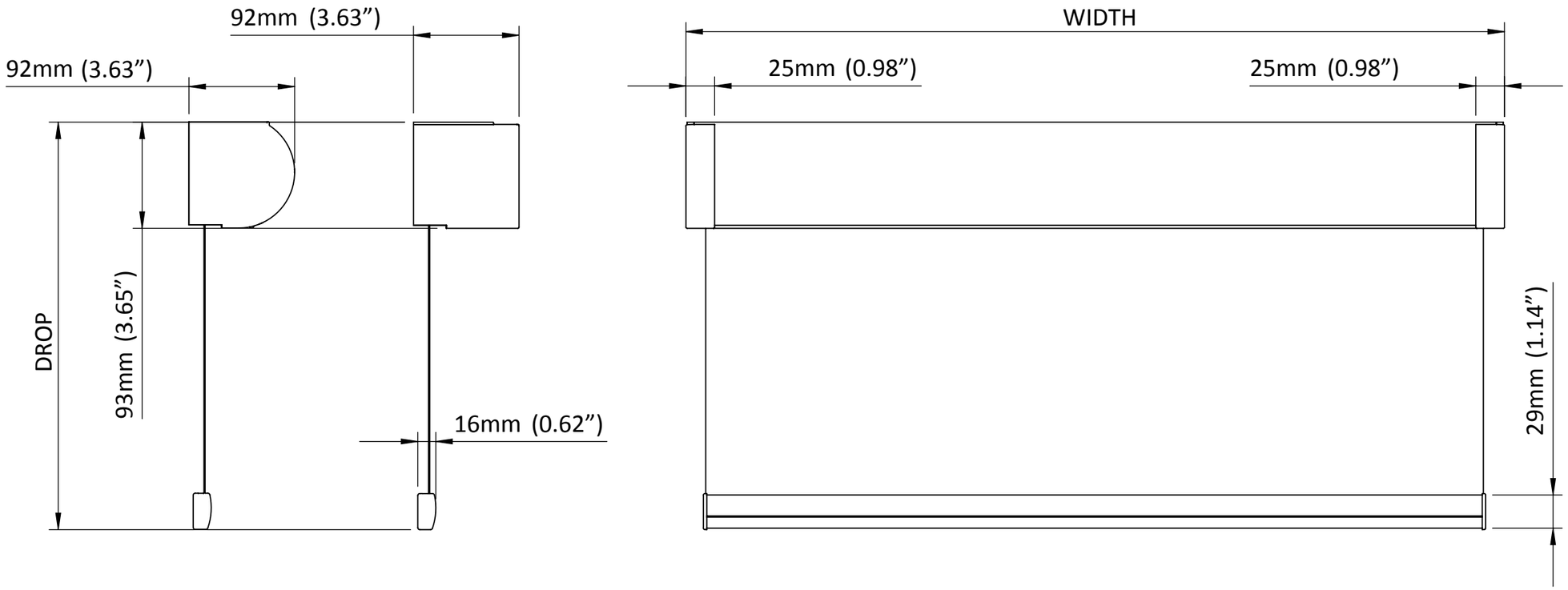

SYSTEM SPECIFICATION SHEET	ACMEDA	© ACMEDA		DRAWN: 21/07/2015		DWG 1 OF 1
SYSTEM DESCRIPTION: CASSETTE 90	Acmeda 110 Northcorp Boulevard F +61 3 9355 0115 Broadmeadows VIC 3047 T +61 3 9355 0100 Australia www.acmeda.com	PROPRIETARY & CONFIDENTIAL THE INFORMATION CONTAINED IN THIS DRAWING IS THE SOLE PROPERTY OF ACMEDA AUSTRALIA. ANY REPRODUCTION IN PART OR WHOLE WITHOUT THE WRITTEN PERMISSION OF ACMEDA AUSTRALIA IS PROHIBITED.		DIMENSIONS IN "MM"		SIZE: A3
SYSTEM CODE: CASSETTE ROLLERS						

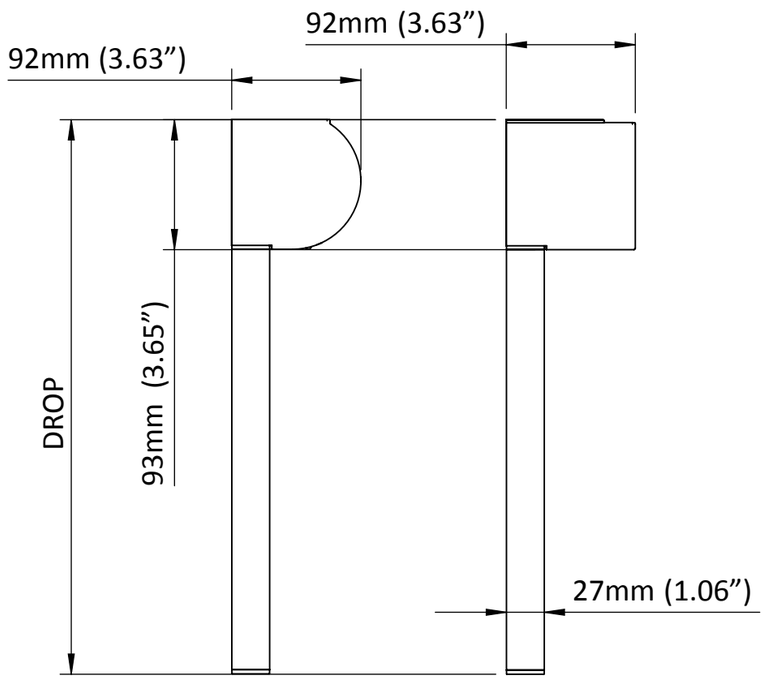

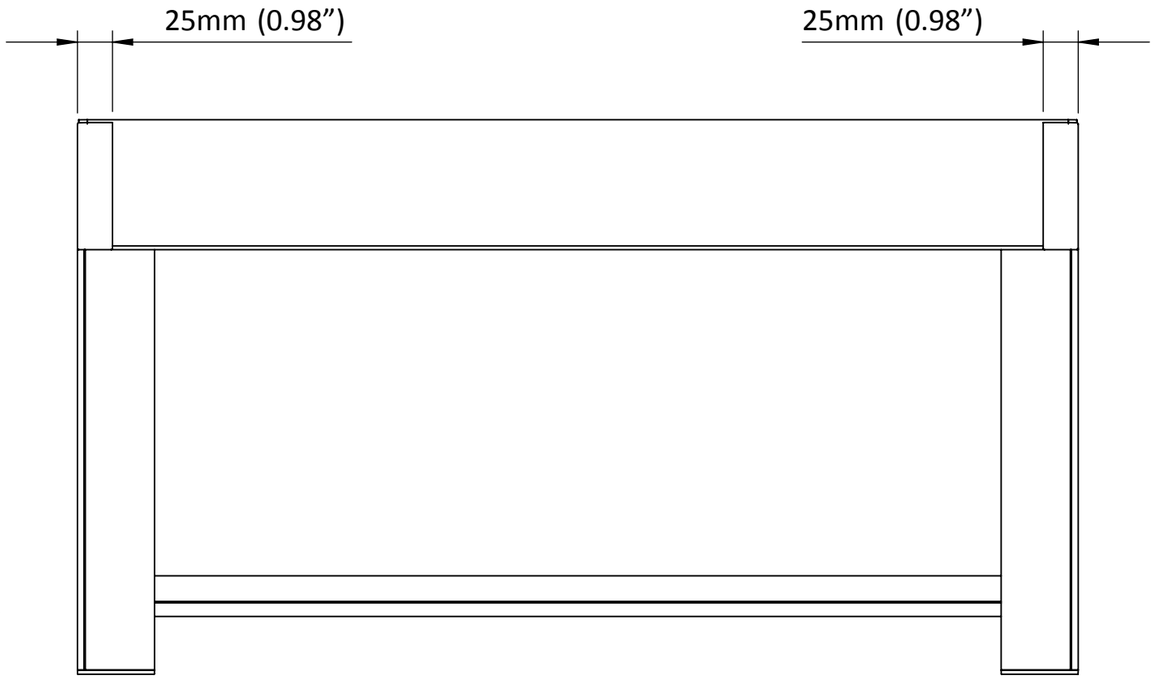

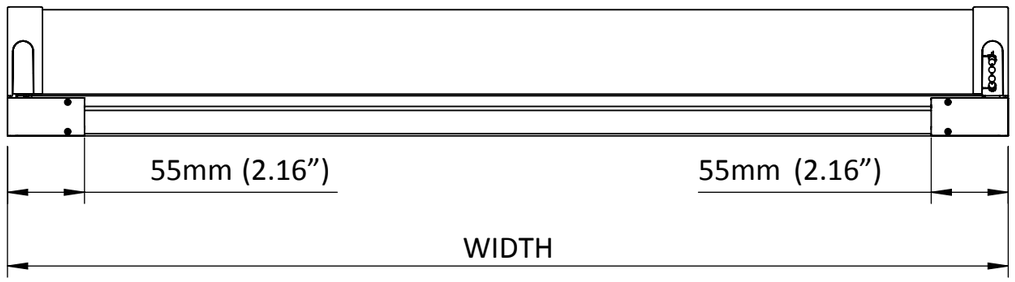

SYSTEM SPECIFICATION SHEET

SYSTEM DESCRIPTION: CASSETTE 90 dim-OUT

SYSTEM CODE: CASSETTE ROLLERS

ACMEDA

Acmeda
110 Northcorp Boulevard F +61 3 9355 0115
Broadmeadows VIC 3047 T +61 3 9355 0100
Australia
www.acmeda.com

© ACMEDA

PROPRIETARY & CONFIDENTIAL
THE INFORMATION CONTAINED IN THIS DRAWING IS THE SOLE PROPERTY OF ACMEDA AUSTRALIA. ANY REPRODUCTION IN PART OR WHOLE WITHOUT THE WRITTEN PERMISSION OF ACMEDA AUSTRALIA IS PROHIBITED.

DRAWN: 21/07/2015

DIMENSIONS IN "MM"

DWG 1 OF 1

SIZE: A3