CF CASSETTE / FASCIA SUITE

PRODUCT SPECIFICATIONS

February 2016

ROLLEASE ACMEDA

CONTENTS

February 2016

SECTION NO.	DESCRIPTION	PAGE NO.
SECTION 1 – OVERVIEW		**1.1**
	PART A – GENERAL SCHEMATICS	1.1
	PART B – SYSTEM OPTIONS	1.3
	PART C – PRODUCT OPTIONS	1.3
	PART D – SYSTEM UPGRADES	1.4
SECTION 2 – SYSTEM SPECIFICATIONS		**2.1**
	PART A – CASSETTE 75 SPRING CAPACITY	2.1
	PART B – CASSETTE 75 CHAIN CONTROL CAPACITY	2.3
	PART C – CASSETTE 75 MOTOR CAPACITY	2.4
	PART D – CASSETTE 90 SPRING CAPACITY	2.5
	PART E CASSETTE 90 CHAIN CONTROL CAPACITY	2.9
	PART F – CASSETTE 90 CHAIN CONTROL + RETROFIT BOOSTER CAPACITY	2.11
	PART G – CASSETTE 90 MOTOR CAPACITY	2.15
	PART H – SYSTEM WEIGHTS	2.17
SECTION 3 – TEST SUMMARY		**3.1**
SECTION 4 – MATERIAL SPECIFICATIONS		**4.1**
SECTION 5 – WARRANTY		**5.1**
SECTION 6 – SPECIFICATION IMAGES		**6.1**
	PART A – BLIND DEDUCTIONS	6.1
	PART B – EASY-LINK ADDITIONAL DEDUCTION ALLOWANCE	6.1
	PART C – MAXIMUM ROLL DIAMETERS	6.2
	PART D – BRACKET DIMENSIONS	6.2
	PART E – ARCHITECTURAL VIEWS	6.3
SECTION 7 - PRODUCT IMAGERY		**7.5**
SECTION 8 – MEASURE & SPECIFY		**8.1**

DISCLAIMER

INTRODUCTION

This product specifications manual has been produced by Rollease Acmeda to supply the necessary information for safe and correct assembly and installation of this system.

DISCLAIMER

Rollease Acmeda has used reasonable care in preparing the information included in this document, but makes no representations or warranties as to the completeness or accuracy of the information. Information is supplied upon the condition that the persons receiving the information will make their own determination as to its suitability for their purposes prior to use. Rollease Acmeda assumes no liability whatsoever for any damages incurred by you resulting from errors in or omissions from the information included herein. Rollease Acmeda reserves the right to make changes without further notice to any products to improve reliability, function or design.

COPYRIGHT

COPYRIGHT © ROLLEASE ACMEDA 2016

All rights reserved. No part of this document may be reproduced or utilised in any means, by any means, electronic or mechanical including photocopying, recordings, or by any information storage or retrieval system, without the express permission from Rollease Acmeda.

SECTION 1 – OVERVIEW

PART A – GENERAL SCHEMATICS

Rollease Acmeda's new cassette roller suite offers a comprehensive range of head box styles, controls and side channel options with improved performance functionality and aesthetics. A contemporary round or square headbox; available in fully enclosed or fascia, designed to house the most commonly used small and medium roller systems. Utilising versatile hardware, the new cassette suite can be matched with dim-OUT side channels for improved energy efficiency.

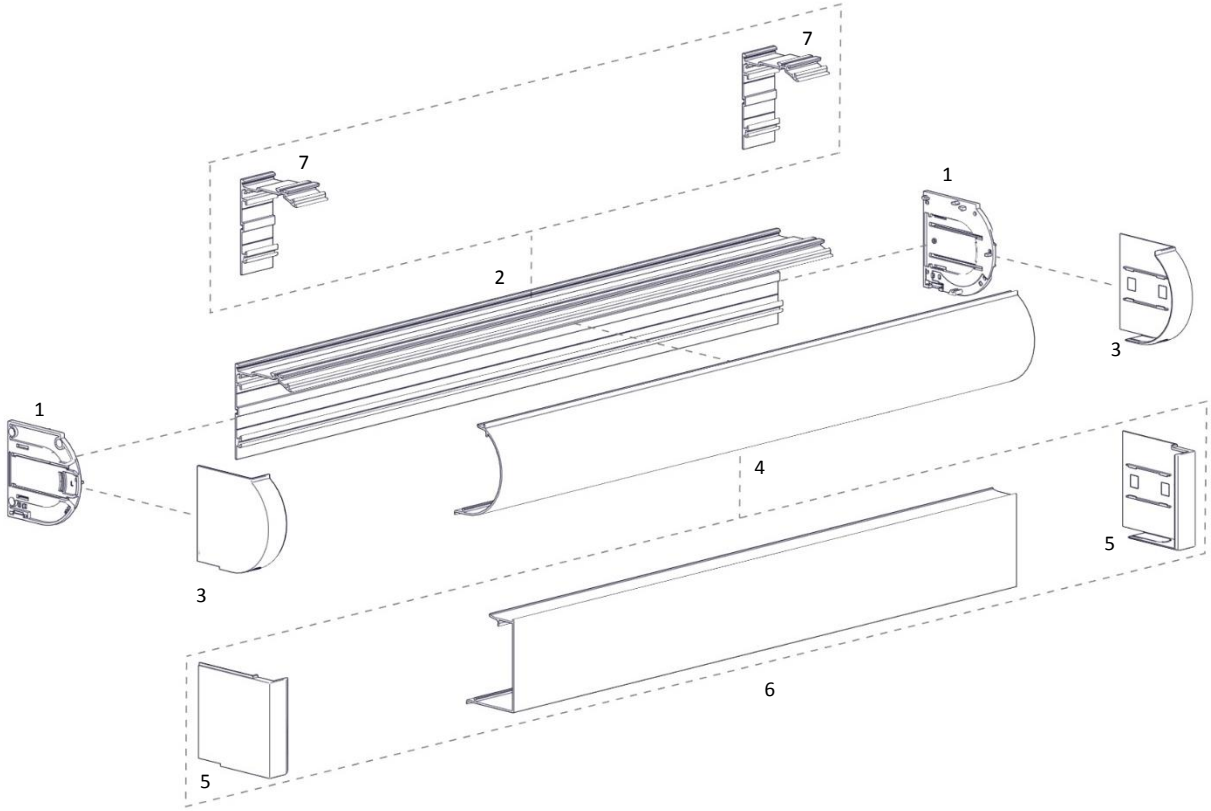

SYSTEM INDEX

CASSETTE 75/90

1. Cassette 75/90 End Plate Set
2. Cassette 75/90 Back
3. Cassette 75/90 Round End Cap
4. Cassette 75/90 Round Cover
5. Cassette 75/90 Square End Cap
6. Cassette 75/90 Square Cover
7. Cassette 75/90 Fascia Bracket 40mm

© Copyright 2016 | Rollease Acmeda Group

dim-OUT System

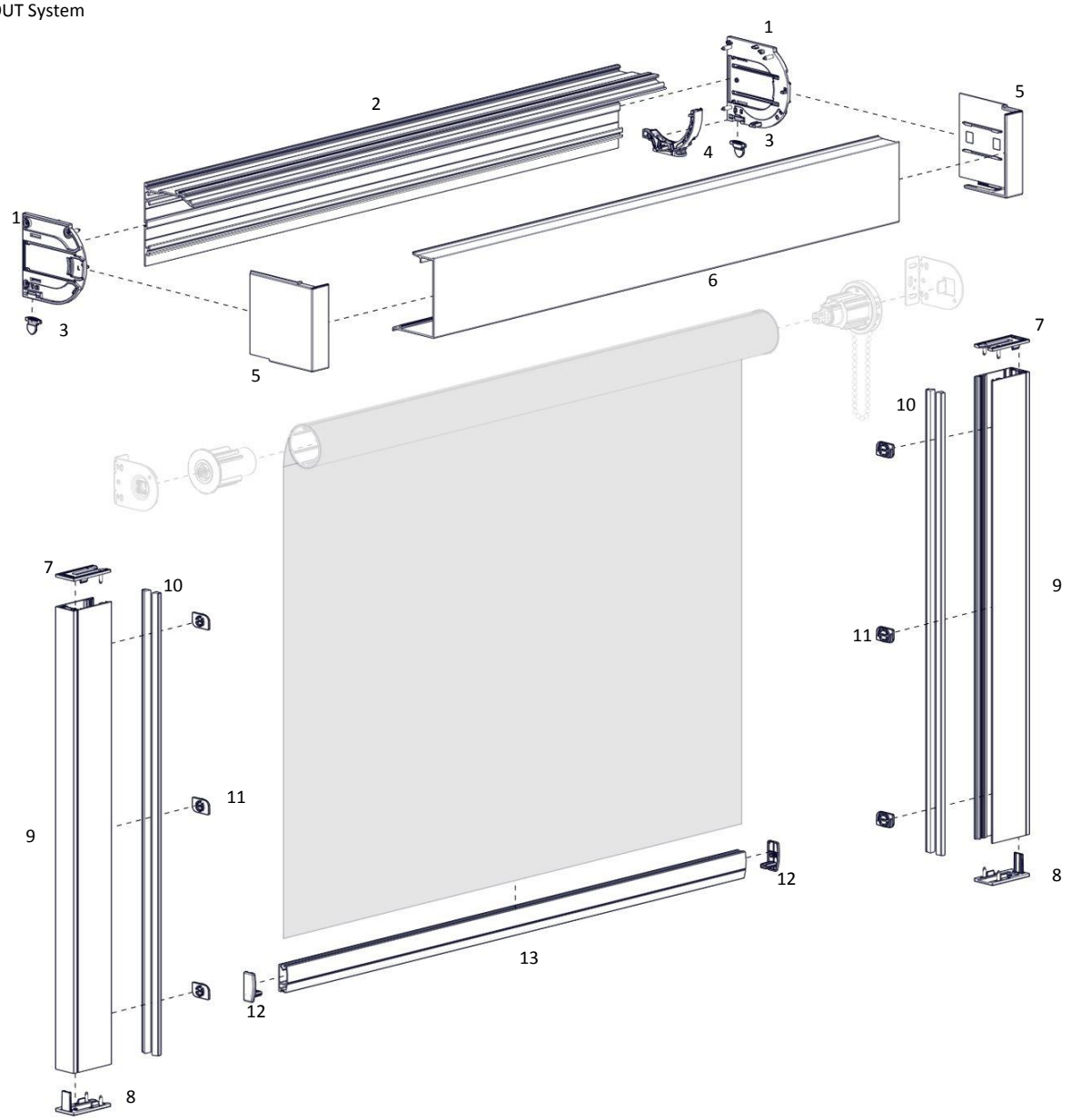

SYSTEM INDEX

CASSTETTE 75/90

1. Cassette 75/90 End Plate Set
2. Cassette 75/90 Back
3. Cassette Side Guide Ear
4. Cassette 75/90 Square Chain Guide Set
5. Cassette 75/90 Square End Cap
6. Cassette 75/90 Square Cover
7. dim-OUT Side Guide Funnel Set + screws
8. Bottom Cap Set + screws
9. dim-OUT Side Guide – 2 Piece Set
10. Fabric Brush T Slot Fit - 7mm High x 4.8mm
11. dim-OUT Side Guide Lock
12. D30 Bottom Rail End Caps
13. D30 Bottom Rail

© Copyright 2016 | Rollease Acmeda Group

PART B – SYSTEM OPTIONS

CONTROL OPTIONS

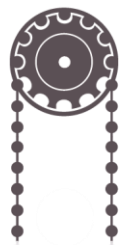

Chain

Spring

Motor

COLOUR RANGE

PART C – PRODUCT OPTIONS

FASCIA

Round Fascia

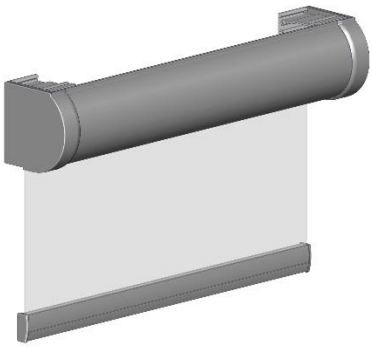

Square Fascia

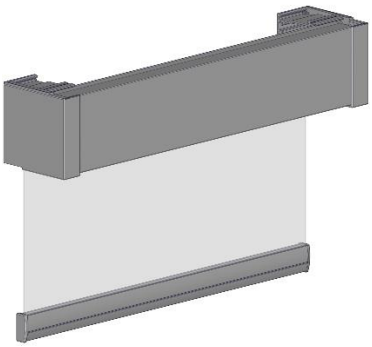

BRACKETS

Cassette 75 – Top & Face Fix

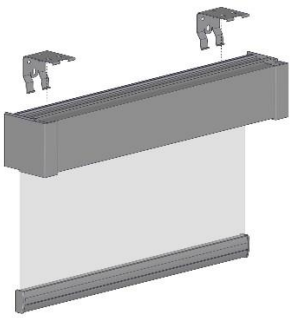

Cassette 90 – Face Fix

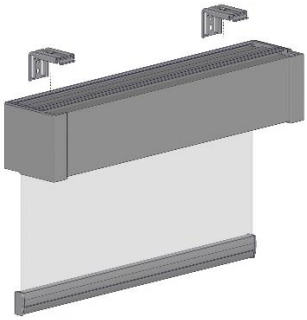

Cassette 90 – Top Fix

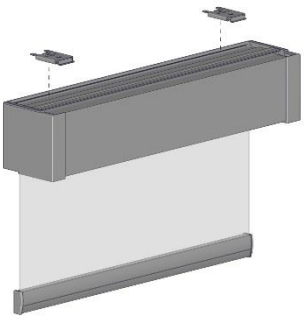

© Copyright 2016 | Rollease Acmeda Group

PART D – SYSTEM UPGRADES

CF CASSETTE/FASCIA - EASY-LINK	CF CASSETTE/FASCIA DIM-OUT - EASY-LINK
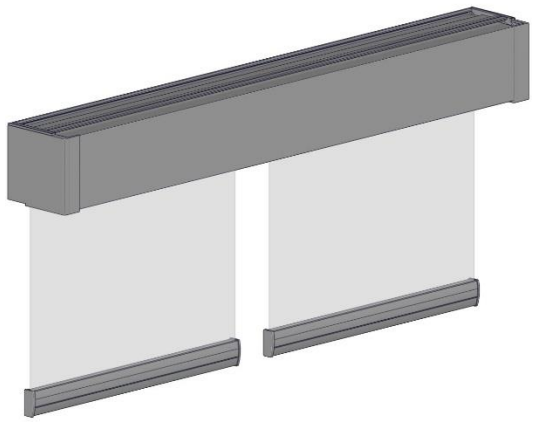	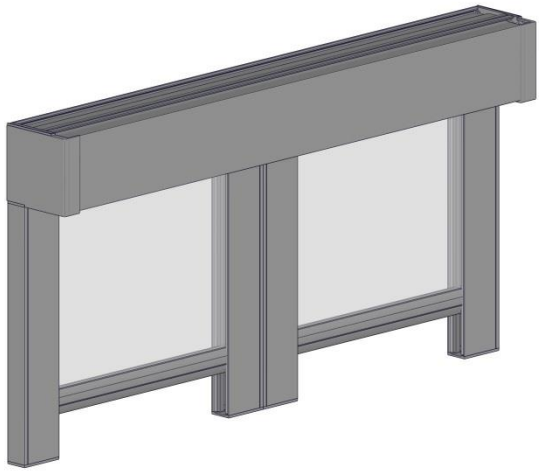
Note: System upgrades above are for Cassette 90 (S40/45) only	

© Copyright 2016 | Rollease Acmeda Group

PART A – CASSETTE 75 SPRING CAPACITY

S35 STD Tube

		Width (m)														
Wraps	Drop (m)	0.2	0.4	0.6	0.8	10	12	14	16	18	2.0	2.2	2.4	2.6	2.8	3.0
4	0.5															
5	0.6															
5	0.7															
6	0.8															
7	0.9															
8	10															
8	11															
9	12															
10	13															
10	14															
11	15															
12	16															
12	17															
13	18															
13	19															
14	2.0															
15	2.1															
15	2.2															
16	2.3															
16	2.4															
17	2.5															
18	2.6															
18	2.7															
19	2.8															
19	2.9															
20	3.0															

LEGEND	DESCRIPTION
	RB01 Junior Spring
	RB01 Standard Spring
	Cannot be achieved - outside product specifications

NOTE: The above chart is based on 450gsm fabric, 0.5mm thick, Round bottom rail, (no ballast)

© Copyright 2016 | Rollease Acmeda Group

S35 HD Tube

		Width (m)														
Wraps	Drop (m)	0.2	0.4	0.6	0.8	10	12	14	16	18	2.0	2.2	2.4	2.6	2.8	3.0
4	0.5															
5	0.6															
5	0.7															
6	0.8															
7	0.9															
8	10															
8	11															
9	12															
10	13															
10	14															
11	15															
12	16															
12	17															
13	18															
13	19															
14	2.0															
15	2.1															
15	2.2															
16	2.3															
16	2.4															
17	2.5															
18	2.6															
18	2.7															
19	2.8															
19	2.9															
20	3.0															

LEGEND	DESCRIPTION
	RB01 Junior Spring
	RB01 Standard Spring
	Cannot be achieved - outside product specifications

NOTE: The above chart is based on 450gsm fabric, 0.5mm thick, Round bottom rail, (no ballast)

© Copyright 2016 | Rollease Acmeda Group

PART B – CASSETTE 75 CHAIN CONTROL CAPACITY

RB08 / RB08 + RETROFIT BOOSTER | S35 SYSTEM

	Width (m)														
Drop (m)	0.2	0.4	0.6	0.8	10	12	14	16	18	2.0	2.2	2.4	2.6	2.8	3.0
0.5															
0.6															
0.7															
0.8															
0.9															
10															
11															
12															
13															
14															
15															
16															
17															
18															
19															
2.0															
2.1															
2.2															
2.3															
2.4															
2.5															
2.6															
2.7															
2.8															
2.9															
3.0															

LEGEND	DESCRIPTION
	RB08 | S35 | All Tubes
	RB08 | S35 | HD Tube
	Cannot be achieved - outside product specifications

NOTE: The above chart is based on 420gsm fabric, 0.5mm thick, D30 medium bottom rail, (no ballast)

© Copyright 2016 | Rollease Acmeda Group

PART C – CASSETTE 75 MOTOR CAPACITY

WIREFREE MOTOR | S35 SYSTEM

	Width (m)														
Drop (m)	0.2	0.4	0.6	0.8	10	12	14	16	18	2.0	2.2	2.4	2.6	2.8	3.0
0.5															
0.6															
0.7															
0.8															
0.9															
10															
11															
12															
13															
14															
15															
16															
17															
18															
19															
2.0															
2.1															
2.2															
2.3															
2.4															
2.5															
2.6															
2.7															
2.8															
2.9															
3.0															

LEGEND	DESCRIPTION
	S35 | STD Tube | AUTOMATE WIREFREE SYNC Motor - 1.1Nm
	S35 | HD Tube | AUTOMATE WIREFREE SYNC Motor - 1.1Nm
	Cannot be achieved - outside product specifications

NOTE: The above chart is based on 420gsm fabric, 0.5mm thick, D30 medium bottom rail, (no ballast)

© Copyright 2016 | Rollease Acmeda Group

PART D – CASSETTE 90 SPRING CAPACITY

S40 TUBES

		Width (m)																			
Wraps	Drop (m)	0.2	0.4	0.6	0.8	1.0	1.2	1.4	1.6	1.8	2.0	2.2	2.4	2.6	2.8	3.0	3.2	3.4	3.6	3.8	4.0
4	0.5																				
5	0.6																				
5	0.7																				
6	0.8																				
7	0.9																				
8	1.0																				
8	1.1																				
9	1.2																				
10	1.3																				
10	1.4																				
11	1.5																				
12	1.6																				
12	1.7																				
13	1.8																				
13	1.9																				
14	2.0																				
15	2.1																				
15	2.2																				
16	2.3																				
16	2.4																				
17	2.5																				
18	2.6																				
18	2.7																				
19	2.8																				
19	2.9																				
20	3.0																				
20	3.1																				
21	3.2																				
21	3.3																				
22	3.4																				
22	3.5																				
23	3.6																				
23	3.7																				
24	3.8																				
24	3.9																				
25	4.0																				

LEGEND	DESCRIPTION
	RB01 Standard Spring
	RB01 Standard Spring with Easy-Link
	RB01 Junior Spring with Easy-Link
	Cannot be achieved - outside product specifications

NOTE: The above chart is based on 450gsm fabric, 0.5mm thick, Round bottom rail, (no ballast)

© Copyright 2016 | Rollease Acmeda Group

S45 LT TUBE

		Width (m)																			
Wraps	Drop (m)	0.2	0.4	0.6	0.8	1.0	1.2	1.4	1.6	1.8	2.0	2.2	2.4	2.6	2.8	3.0	3.2	3.4	3.6	3.8	4.0
4	0.5																				
4	0.6																				
5	0.7																				
6	0.8																				
6	0.9																				
7	1.0																				
7	1.1																				
8	1.2																				
9	1.3																				
9	1.4																				
10	1.5																				
10	1.6																				
11	1.7																				
12	1.8																				
12	1.9																				
13	2.0																				
13	2.1																				
14	2.2																				
14	2.3																				
15	2.4																				
16	2.5																				
16	2.6																				
17	2.7																				
17	2.8																				
18	2.9																				
18	3.0																				
19	3.1																				
19	3.2																				
20	3.3																				
20	3.4																				
21	3.5																				
21	3.6																				
22	3.7																				
22	3.8																				
23	3.9																				
23	4.0																				

LEGEND	DESCRIPTION
	RB01 Standard Spring
	RB01 Junior Spring
	RB01 Junior Spring with Easy-Link
	Cannot be achieved - outside product specifications

NOTE: The above chart is based on 450gsm fabric, 0.5mm thick, Round bottom rail, (no ballast)

© Copyright 2016 | Rollease Acmeda Group

S45 STD TUBE

		Width (m)																			
Wraps	Drop (m)	0.2	0.4	0.6	0.8	1.0	1.2	1.4	1.6	1.8	2.0	2.2	2.4	2.6	2.8	3.0	3.2	3.4	3.6	3.8	4.0
4	0.5																				
4	0.6																				
5	0.7																				
6	0.8																				
6	0.9																				
7	1.0																				
7	1.1																				
8	1.2																				
9	1.3																				
9	1.4																				
10	1.5																				
10	1.6																				
11	1.7																				
12	1.8																				
12	1.9																				
13	2.0																				
13	2.1																				
14	2.2																				
14	2.3																				
15	2.4																				
16	2.5																				
16	2.6																				
17	2.7																				
17	2.8																				
18	2.9																				
18	3.0																				
19	3.1																				
19	3.2																				
20	3.3																				
20	3.4																				
21	3.5																				
21	3.6																				
22	3.7																				
22	3.8																				
23	3.9																				
23	4.0																				

LEGEND	DESCRIPTION
	RB01 Standard Spring
	RB01 Junior Spring
	RB01 Junior Spring with Easy-Link
	Cannot be achieved - outside product specifications

NOTE: The above chart is based on 450gsm fabric, 0.5mm thick, Round bottom rail, (no ballast)

© Copyright 2016 | Rollease Acmeda Group

S45 HD TUBE

		Width (m)																			
Wraps	Drop (m)	0.2	0.4	0.6	0.8	1.0	1.2	1.4	1.6	1.8	2.0	2.2	2.4	2.6	2.8	3.0	3.2	3.4	3.6	3.8	4.0
3	0.5																				
4	0.6																				
4	0.7																				
5	0.8																				
6	0.9																				
6	1.0																				
7	1.1																				
7	1.2																				
8	1.3																				
8	1.4																				
9	1.5																				
10	1.6																				
10	1.7																				
11	1.8																				
11	1.9																				
12	2.0																				
12	2.1																				
13	2.2																				
13	2.3																				
14	2.4																				
14	2.5																				
15	2.6																				
15	2.7																				
16	2.8																				
16	2.9																				
17	3.0																				
17	3.1																				
18	3.2																				
18	3.3																				
19	3.4																				
19	3.5																				
20	3.6																				
20	3.7																				
21	3.8																				
21	3.9																				
21	4.0																				

LEGEND	DESCRIPTION
	RB01 Standard Spring Booster
	RB01 Junior Spring Booster
	Cannot be achieved - outside product specifications

NOTE: The above chart is based on 450gsm fabric, 0.5mm thick, Round bottom rail, (no ballast)

© Copyright 2016 | Rollease Acmeda Group

PART E CASSETTE 90 CHAIN CONTROL CAPACITY

RB08 | S40 SYSTEM

	Width (m)																			
Drop (m)	0.2	0.4	0.6	0.8	10	12	14	16	18	2.0	2.2	2.4	2.6	2.8	3.0	3.2	3.4	3.6	3.8	4.0
0.5																				
0.6																				
0.7																				
0.8																				
0.9																				
10																				
11																				
12																				
13																				
14																				
15																				
16																				
17																				
18																				
19																				
2.0																				
2.1																				
2.2																				
2.3																				
2.4																				
2.5																				
2.6																				
2.7																				
2.8																				
2.9																				
3.0																				
3.1																				
3.2																				
3.3																				
3.4																				
3.5																				
3.6																				
3.7																				
3.8																				
3.9																				
4.0																				

LEGEND	DESCRIPTION
	RB09 | S40 | All Tubes
	RB09 | S40 | 40 HD Tube
	S45 Easy-Link
	Cannot be achieved - outside product specifications

NOTE: The above chart is based on 420gsm fabric, 0.5mm thick, D30 medium bottom rail, (no ballast)

© Copyright 2016 | Rollease Acmeda Group

RB08/RB09 | S45 SYSTEM

	Width (m)																			
Drop (m)	0.2	0.4	0.6	0.8	10	12	14	16	18	2.0	2.2	2.4	2.6	2.8	3.0	3.2	3.4	3.6	3.8	4.0
0.5																				
0.6																				
0.7																				
0.8																				
0.9																				
10																				
11																				
12																				
13																				
14																				
15																				
16																				
17																				
18																				
19																				
2.0																				
2.1																				
2.2																				
2.3																				
2.4																				
2.5																				
2.6																				
2.7																				
2.8																				
2.9																				
3.0																				
3.1																				
3.2																				
3.3																				
3.4																				
3.5																				
3.6																				
3.7																				
3.8																				
3.9																				
4.0																				

LEGEND	DESCRIPTION
	RB09 | S45 | All Tubes
	RB09 | S45 | STD + HD Tubes
	RB09 | S45 | HD Tube
	S45 Easy-Link
	Cannot be achieved - outside product specifications

NOTE: The above chart is based on 420gsm fabric, 0.5mm thick, D30 medium bottom rail, (no ballast)

© Copyright 2016 | Rollease Acmeda Group

PART F – CASSETTE 90 CHAIN CONTROL + RETROFIT BOOSTER CAPACITY

RB08 | S40 SYSTEM

		Width (m)																			
Wraps	Drop (m)	0.2	0.4	0.6	0.8	1.0	1.2	1.4	1.6	1.8	2.0	2.2	2.4	2.6	2.8	3.0	3.2	3.4	3.6	3.8	4.0
4	0.5																				
5	0.6																				
5	0.7																				
6	0.8																				
7	0.9																				
8	1.0																				
8	1.1																				
9	1.2																				
10	1.3																				
10	1.4																				
11	1.5																				
12	1.6																				
12	1.7																				
13	1.8																				
13	1.9																				
14	2.0																				
15	2.1																				
15	2.2																				
16	2.3																				
16	2.4																				
17	2.5																				
18	2.6																				
18	2.7																				
19	2.8																				
19	2.9																				
20	3.0																				
20	3.1																				
21	3.2																				
21	3.3																				
22	3.4																				
22	3.5																				
23	3.6																				
23	3.7																				
24	3.8																				
24	3.9																				
25	4.0																				

LEGEND	DESCRIPTION
	RB04 Standard Retrofit Booster
	RB04 Standard Retrofit Booster with Easy-Link
	RB04 Heavy Duty Retrofit Booster with Easy-Link
	Cannot be achieved - outside product specifications

NOTE: The above chart is based on 450gsm fabric, 0.5mm thick, Round bottom rail, (no ballast)

© Copyright 2016 | Rollease Acmeda Group

RB08/RB09 | S45 LT TUBE

		Width (m)																			
Wraps	Drop (m)	0.2	0.4	0.6	0.8	1.0	1.2	1.4	1.6	1.8	2.0	2.2	2.4	2.6	2.8	3.0	3.2	3.4	3.6	3.8	4.0
4	0.5																				
4	0.6																				
5	0.7																				
6	0.8																				
6	0.9																				
7	1.0																				
7	1.1																				
8	1.2																				
9	1.3																				
9	1.4																				
10	1.5																				
10	1.6																				
11	1.7																				
12	1.8																				
12	1.9																				
13	2.0																				
13	2.1																				
14	2.2																				
14	2.3																				
15	2.4																				
16	2.5																				
16	2.6																				
17	2.7																				
17	2.8																				
18	2.9																				
18	3.0																				
19	3.1																				
19	3.2																				
20	3.3																				
20	3.4																				
21	3.5																				
21	3.6																				
22	3.7																				
22	3.8																				
23	3.9																				
23	4.0																				

LEGEND	DESCRIPTION
	RB04 Standard Retrofit Booster
	RB04 Heavy Duty Retrofit Booster
	RB04 Heavy Duty Retrofit Booster with Easy-Link
	Cannot be achieved - outside product specifications

NOTE: The above chart is based on 450gsm fabric, 0.5mm thick, Round bottom rail, (no ballast)

© Copyright 2016 | Rollease Acmeda Group

RB08/RB09 | S45 STD TUBE

		Width (m)																			
Wraps	Drop (m)	0.2	0.4	0.6	0.8	10	12	14	16	18	2.0	2.2	2.4	2.6	2.8	3.0	3.2	3.4	3.6	3.8	4.0
4	0.5																				
4	0.6																				
5	0.7																				
6	0.8																				
6	0.9																				
7	1.0																				
7	1.1																				
8	1.2																				
9	1.3																				
9	1.4																				
10	1.5																				
10	1.6																				
11	1.7																				
12	1.8																				
12	1.9																				
13	2.0																				
13	2.1																				
14	2.2																				
14	2.3																				
15	2.4																				
16	2.5																				
16	2.6																				
17	2.7																				
17	2.8																				
18	2.9																				
18	3.0																				
19	3.1																				
19	3.2																				
20	3.3																				
20	3.4																				
21	3.5																				
21	3.6																				
22	3.7																				
22	3.8																				
23	3.9																				
23	4.0																				

LEGEND	DESCRIPTION
	RB04 Standard Retrofit Booster
	RB04 Heavy Duty Retrofit Booster
	RB04 Heavy Duty Retrofit Booster with Easy-Link
	Cannot be achieved - outside product specifications

NOTE: The above chart is based on 450gsm fabric, 0.5mm thick, Round bottom rail, (no ballast)

© Copyright 2016 | Rollease Acmeda Group

RB08/RB09 | S45 HD TUBE

		Width (m)																			
Wraps	Drop (m)	0.2	0.4	0.6	0.8	10	12	14	16	18	2.0	2.2	2.4	2.6	2.8	3.0	3.2	3.4	3.6	3.8	4.0
3	0.5																				
4	0.6																				
4	0.7																				
5	0.8																				
6	0.9																				
6	1.0																				
7	1.1																				
7	1.2																				
8	1.3																				
8	1.4																				
9	1.5																				
10	1.6																				
10	1.7																				
11	1.8																				
11	1.9																				
12	2.0																				
12	2.1																				
13	2.2																				
13	2.3																				
14	2.4																				
14	2.5																				
15	2.6																				
15	2.7																				
16	2.8																				
16	2.9																				
17	3.0																				
17	3.1																				
18	3.2																				
18	3.3																				
19	3.4																				
19	3.5																				
20	3.6																				
20	3.7																				
21	3.8																				
21	3.9																				
21	4.0																				

LEGEND	DESCRIPTION
	RB04 Standard Retrofit Booster
	RB04 Heavy Duty Retrofit Booster
	RB04 Heavy Duty Retrofit Booster with Easy-Link
	Cannot be achieved - outside product specifications

NOTE: The above chart is based on 450gsm fabric, 0.5mm thick, Round bottom rail, (no ballast)

© Copyright 2016 | Rollease Acmeda Group

PART G – CASSETTE 90 MOTOR CAPACITY

MOTORISED AUTOMATE WIREFREE - 1.1Nm | S45

	Width (m)																			
Drop (m)	0.2	0.4	0.6	0.8	10	12	14	16	18	2.0	2.2	2.4	2.6	2.8	3.0	3.2	3.4	3.6	3.8	4.0
0.5																				
0.6																				
0.7																				
0.8																				
0.9																				
10																				
11																				
12																				
13																				
14																				
15																				
16																				
17																				
18																				
19																				
2.0																				
2.1																				
2.2																				
2.3																				
2.4																				
2.5																				
2.6																				
2.7																				
2.8																				
2.9																				
3.0																				
3.1																				
3.2																				
3.3																				
3.4																				
3.5																				
3.6																				
3.7																				
3.8																				
3.9																				
4.0																				

LEGEND	DESCRIPTION
	S45 | ALL Tubes
	S45 | STD + HD Tubes
	S45 | HD Tube
	S45 Easy-Link
	Cannot be achieved - outside product specifications

NOTE: The above chart is based on 420gsm fabric, 0.5mm thick, D30 medium bottom rail, (no ballast)

© Copyright 2016 | Rollease Acmeda Group

MOTORISED AUTOMATE EL/ML/ELQ – 6.0Nm | S45

	Width (m)																			
Drop (m)	0.2	0.4	0.6	0.8	10	12	14	16	18	2.0	2.2	2.4	2.6	2.8	3.0	3.2	3.4	3.6	3.8	4.0
0.5																				
0.6																				
0.7																				
0.8																				
0.9																				
10																				
11																				
12																				
13																				
14																				
15																				
16																				
17																				
18																				
19																				
2.0																				
2.1																				
2.2																				
2.3																				
2.4																				
2.5																				
2.6																				
2.7																				
2.8																				
2.9																				
3.0																				
3.1																				
3.2																				
3.3																				
3.4																				
3.5																				
3.6																				
3.7																				
3.8																				
3.9																				
4.0																				

LEGEND	DESCRIPTION
	S45 | ALL Tubes
	S45 | STD + HD Tubes
	S45 | HD Tube
	S45 Easy-Link
	Cannot be achieved - outside product specifications

NOTE: The above chart is based on 420gsm fabric, 0.5mm thick, D30 medium bottom rail, (no ballast)

© Copyright 2016 | Rollease Acmeda Group

CASSETTE 75 | AUTOMATE WIREFREE | S35 T-SPLINE

	Width (m)												
Drop (m)	**0.6**	**0.8**	**1.0**	**1.2**	**1.4**	**1.6**	**1.8**	**2.0**	**2.2**	**2.4**	**2.6**	**2.8**	**3.0**
0.5	1.9	2.4	2.9	3.3	3.8	4.3	4.8	5.3	5.7	6.2	6.7	7.2	7.7
0.6	1.9	2.4	2.9	3.4	3.9	4.4	4.9	5.3	5.8	6.3	6.8	7.3	7.8
0.7	2.0	2.5	2.9	3.4	3.9	4.4	4.9	5.4	5.9	6.4	6.9	7.4	7.9
0.8	2.0	2.5	3.0	3.5	4.0	4.5	5.0	5.5	6.0	6.5	7.0	7.5	8.0
0.9	2.0	2.5	3.0	3.5	4.1	4.6	5.1	5.6	6.1	6.6	7.1	7.7	8.2
1.0	2.0	2.5	3.1	3.6	4.1	4.6	5.2	5.7	6.2	6.7	7.2	7.8	8.3
1.1	2.0	2.6	3.1	3.6	4.2	4.7	5.2	5.8	6.3	6.8	7.4	7.9	8.4
1.2	2.1	2.6	3.2	3.7	4.2	4.8	5.3	5.8	6.4	6.9	7.5	8.0	8.5
1.3	2.1	2.6	3.2	3.7	4.3	4.8	5.4	5.9	6.5	7.0	7.6	8.1	8.7
1.4	2.1	2.7	3.2	3.8	4.3	4.9	5.5	6.0	6.6	7.1	7.7	8.2	8.8
1.5	2.1	2.7	3.3	3.8	4.4	5.0	5.5	6.1	6.7	7.2	7.8	8.3	8.9
1.6	2.2	2.7	3.3	3.9	4.5	5.0	5.6	6.2	6.7	7.3	7.9	8.5	9.0
1.7	2.2	2.8	3.4	3.9	4.5	5.1	5.7	6.3	6.8	7.4	8.0	8.6	9.2
1.8	2.2	2.8	3.4	4.0	4.6	5.2	5.8	6.3	6.9	7.5	8.1	8.7	9.3
1.9	2.2	2.8	3.4	4.0	4.6	5.2	5.8	6.4	7.0	7.6	8.2	8.8	9.4
2.0	2.3	2.9	3.5	4.1	4.7	5.3	5.9	6.5	7.1	7.7	8.3	8.9	9.5
2.1	2.3	2.9	3.5	4.1	4.7	5.4	6.0	6.6	7.2	7.8	8.4	9.0	9.7
2.2	2.3	2.9	3.6	4.2	4.8	5.4	6.0	6.7	7.3	7.9	8.5	9.2	9.8
2.3	2.3	3.0	3.6	4.2	4.9	5.5	6.1	6.8	7.4	8.0	8.6	9.3	9.9
2.4	2.4	3.0	3.6	4.3	4.9	5.6	6.2	6.8	7.5	8.1	8.8	9.4	10.0
2.5	2.4	3.0	3.7	4.3	5.0	5.6	6.3	6.9	7.6	8.2	8.9	9.5	10.2
2.6	2.4	3.1	3.7	4.4	5.0	5.7	6.3	7.0	7.7	8.3	9.0	9.6	10.3
2.7	2.4	3.1	3.8	4.4	5.1	5.8	6.4	7.1	7.7	8.4	9.1	9.7	10.4
2.8	2.5	3.1	3.8	4.5	5.1	5.8	6.5	7.2	7.8	8.5	9.2	9.9	10.5
2.9	2.5	3.2	3.8	4.5	5.2	5.9	6.6	7.2	7.9	8.6	9.3	10.0	10.7
3.0	2.5	3.2	3.9	4.6	5.3	5.9	6.6	7.3	8.0	8.7	9.4	10.1	10.8

	Cannot be achieved - outside product specifications

For dim-OUT system: Add 0.85kg per metre of Drop

NOTE: Weights are based on theoretical calculations –
Cassette 75, 420gsm Fabric, D30 Med Bottom Rail, S35 T-Spline Tube & Automate Wirefree Control

All weights in table above are meausred in kilograms (kg)

© Copyright 2016 | Rollease Acmeda Group

CASSETTE 90 | AUTOMATE EL MOTOR | S45 TUBE STD

	Width (m)												
Drop (m)	**0.6**	**0.8**	**1.0**	**1.2**	**1.4**	**1.6**	**1.8**	**2.0**	**2.2**	**2.4**	**2.6**	**2.8**	**3.0**
0.5	3.8	4.5	5.1	5.7	6.3	6.9	7.5	8.1	8.7	9.3	9.9	10.6	11.2
0.6	3.9	4.5	5.1	5.7	6.3	7.0	7.6	8.2	8.8	9.4	10.0	10.7	11.3
0.7	3.9	4.5	5.1	5.8	6.4	7.0	7.6	8.3	8.9	9.5	10.2	10.8	11.4
0.8	3.9	4.5	5.2	5.8	6.5	7.1	7.7	8.4	9.0	9.6	10.3	10.9	11.5
0.9	3.9	4.6	5.2	5.9	6.5	7.2	7.8	8.4	9.1	9.7	10.4	11.0	11.7
1.0	4.0	4.6	5.3	5.9	6.6	7.2	7.9	8.5	9.2	9.8	10.5	11.1	11.8
1.1	4.0	4.6	5.3	6.0	6.6	7.3	7.9	8.6	9.3	9.9	10.6	11.2	11.9
1.2	4.0	4.7	5.3	6.0	6.7	7.4	8.0	8.7	9.4	10.0	10.7	11.4	12.0
1.3	4.0	4.7	5.4	6.1	6.7	7.4	8.1	8.8	9.4	10.1	10.8	11.5	12.2
1.4	4.1	4.7	5.4	6.1	6.8	7.5	8.2	8.9	9.5	10.2	10.9	11.6	12.3
1.5	4.1	4.8	5.5	6.2	6.9	7.5	8.2	8.9	9.6	10.3	11.0	11.7	12.4
1.6	4.1	4.8	5.5	6.2	6.9	7.6	8.3	9.0	9.7	10.4	11.1	11.8	12.5
1.7	4.1	4.8	5.5	6.3	7.0	7.7	8.4	9.1	9.8	10.5	11.2	11.9	12.7
1.8	4.1	4.9	5.6	6.3	7.0	7.7	8.5	9.2	9.9	10.6	11.3	12.1	12.8
1.9	4.2	4.9	5.6	6.4	7.1	7.8	8.5	9.3	10.0	10.7	11.4	12.2	12.9
2.0	4.2	4.9	5.7	6.4	7.1	7.9	8.6	9.3	10.1	10.8	11.6	12.3	13.0
2.1	4.2	5.0	5.7	6.5	7.2	7.9	8.7	9.4	10.2	10.9	11.7	12.4	13.2
2.2	4.2	5.0	5.7	6.5	7.3	8.0	8.8	9.5	10.3	11.0	11.8	12.5	13.3
2.3	4.3	5.0	5.8	6.6	7.3	8.1	8.8	9.6	10.4	11.1	11.9	12.6	13.4
2.4	4.3	5.1	5.8	6.6	7.4	8.1	8.9	9.7	10.4	11.2	12.0	12.8	13.5
2.5	4.3	5.1	5.9	6.6	7.4	8.2	9.0	9.8	10.5	11.3	12.1	12.9	13.7
2.6	4.3	5.1	5.9	6.7	7.5	8.3	9.1	9.8	10.6	11.4	12.2	13.0	13.8
2.7	4.4	5.2	6.0	6.7	7.5	8.3	9.1	9.9	10.7	11.5	12.3	13.1	13.9
2.8	4.4	5.2	6.0	6.8	7.6	8.4	9.2	10.0	10.8	11.6	12.4	13.2	14.0
2.9	4.4	5.2	6.0	6.8	7.7	8.5	9.3	10.1	10.9	11.7	12.5	13.3	14.1
3.0	4.4	5.3	6.1	6.9	7.7	8.5	9.4	10.2	11.0	11.8	12.6	13.5	14.3

	Cannot be achieved - outside product specifications

For dim-OUT system: Add 0.85kg per metre of Drop

NOTE: Weights are based on theoretical calculations –
Cassette 90, 420gsm Fabric, D30 Med Bottom Rail, S45 T-Spline Tube & Automate EL Motor

All weights in table above are meausred in kilograms (kg)

© Copyright 2016 | Rollease Acmeda Group

SECTION 3 – TEST SUMMARY

TEST – CYCLE

TEST DESCRIPTION:	**CASSETTE 75 CHAIN GUIDE**	**TEST REPORT NUMBER:**	TR-
CYCLES PASSED:	N/A	**TORQUE:**	N/A
BRACKET INSTALLATION:	Direct Mount	**WIRE / SIDE GUIDE INSTALLATION:**	N/A

TEST DESCRIPTION:	**CASSETTE 90 CHAIN GUIDE**	**TEST REPORT NUMBER:**	TR-2015021
CYCLES PASSED:	10,000	**TORQUE:**	N/A
BRACKET INSTALLATION:	Direct Mount	**WIRE / SIDE GUIDE INSTALLATION:**	N/A

TEST – PRODUCT EVALUATION (FABRICATION, INSTALLATION, OPERATIONAL)

TEST DESCRIPTION:	CASSETTE 90 dim-OUT	**PRODUCT LOCATION:**	R&T
BLIND WIDTH (mm):	1200	**BLIND DROP (mm):**	1500
CONTROL:	Chain Control	**FABRIC:**	Balmoral – Blockout 390gsm
BRACKET INSTALLATION:	Direct Mount	**WIRE / SIDE GUIDE INSTALLATION:**	dim-OUT

© Copyright 2016 | Rollease Acmeda Group

SECTION 4 – MATERIAL SPECIFICATIONS

PART NUMBER	PRODUCT	MATERIAL	METAL FINISHES
RC02-0101-XXX075	CASSETTE 75 END PLATE SET + SCREWS	POM/STEEL	Z/P (SCREW)
RC01-0201-XXX480	CASSETTE 75 BACK	ALUMINIUM	ANODISED 15µm MIN DEPTH P/COAT MAX 0.1mm
RC02-0102-XXX075	CASSETTE 75 ROUND COVER SET	ABS+PC	N/A
RC01-0202-XXX480	CASSETTE 75 ROUND COVER	ALUMINIUM	ANODISED 15µm MIN DEPTH P/COAT MAX 0.1mm
RC02-0103-XXX075	CASSETTE 75 SQUARE COVER SET	ABS+PC	N/A
RC01-0203-XXX480	CASSETTE 75 SQUARE COVER	ALUMINIUM	ANODISED 15µm MIN DEPTH P/COAT MAX 0.1mm
RC02-0201-XXX075	CASSETTE 75 ROUND CHAIN GUIDE SET	ABS+PU	N/A
RC02-0202-XXX075	CASSETTE 75 SQUARE CHAIN GUIDE SET	ABS+PU	N/A
RC02-0101-XXX090	CASSETTE 90 END PLATE SET + SCREWS	POM/STEEL	Z/P (SCREW)
RC01-0101-XXX480	CASSETTE 90 BACK	ALUMINIUM	ANODISED 15µm MIN DEPTH P/COAT MAX 0.1mm
RC02-0102-XXX090	CASSETTE 90 ROUND COVER SET	ABS+PC	N/A
RC01-0102-XXX480	CASSETTE 90 ROUND COVER	ALUMINIUM	ANODISED 15µm MIN DEPTH P/COAT MAX 0.1mm
RC02-0201-XXX090	CASSETTE 90 ROUND CHAIN GUIDE SET	ABS+PU	N/A
RC02-0202-XXX090	CASSETTE 90 SQUARE CHAIN GUIDE SET	ABS+PU	N/A
RC02-0103-XXX090	CASSETTE 90 SQUARE COVER SET	ABS+PC	N/A
RC01-0103-XXX480	CASSETTE 90 SQUARE COVER	ALUMINIUM	ANODISED 15µm MIN DEPTH P/COAT MAX 0.1mm
RC91-1002-XXX000	dim-OUT SIDE GUIDE FUNNEL & SCREW SET	POM + STEEL	N/A
RC91-0302-XXX000	CASSETTE SIDE GUIDE EAR	POM	N/A
RB91-1231-XXX580	D30 BOTTOM RAIL	ALUMINIUM	ANODISED 15µm MIN DEPTH P/COAT MAX 0.1mm
RB91-2131-XXX002	D30 BOTTOM RAIL END CAPS	POM	N/A
RC91-1001-XXX000	BOTTOM CAP + SCREWS	POM + STEEL	N/A
RC91-0101-XXX580	dim-OUT SIDE GUIDE – 2 PIECE SET	ALUMINIUM	ANODISED 15µm MIN DEPTH P/COAT MAX 0.1mm
RC91-0302-XXX000	CASSETTE SIDE GUIDE EAR	POM	N/A
RC91-0201-XXX000	dim-OUT SIDE GUIDE LOCK	POM	N/A
RC03-1003-XXX075	CASSETTE 75 MOUNTING BRACKET	STEEL	Z/P
RC03-1001-XXX090	CASSETTE 90 MOUNTING BRACKET/TOP FIX	STEEL	Z/P
RC03-0201-XXX040	FASCIA 75 BRACKET – 40MM	ALUMINIUM	ANODISED 15µm MIN DEPTH P/COAT MAX 0.1mm
AW91-1501-XXX000	FABRIC BRUSH T-SLOT FIT	PP	N/A
RC03-1002-XXX090	CASSETTE 90 MOUNTING BRACKET/FACE FIX	STEEL	ANODISED 15µm MIN DEPTH P/COAT MAX 0.1mm
RC03-0101-XXX040	FASCIA 90 BRACKET – 40MM	ALUMINIUM	ANODISED 15µm MIN DEPTH P/COAT MAX 0.1mm

© Copyright 2016 | Rollease Acmeda Group

SECTION 5 – WARRANTY

Acmeda provide a 5 year hardware warranty against defects to the original purchaser (the fabricator/manufacturer).

The hardware warranty is not to be transferred to the end consumer.

The hardware warranty is limited to the repair or resupply of defective hardware components to the fabricator/manufacturer only.

The hardware warranty is applicable to normal use.

The hardware warranty will not apply where the defect arises due to incorrect assembly and installation.

Retailers are obliged to supply consumers with their own warranty, if required, at the point of purchase.

© Copyright 2016 | Rollease Acmeda Group

SECTION 6 – SPECIFICATION IMAGES

Please contact Rollease Acmeda: marketing@rolleaseacmeda.com to request electronic copies of the file listed below.

PART A – BLIND DEDUCTIONS

	FABRIC / TUBE / BOTTOM RAIL DEDUCTIONS									
	IDLER END		CONTROL END							
			SPRING		MOTOR TYPES		WINDER TYPES			
S35 CASSETTE 75	**RB08**		**RB02 SPRING**		**WIREFREE Motor**		**RB08 CHAIN WINDER**			
	19mm (0.748”)		19mm (0.748”)		18mm (0.709”)		20mm (0.787”)			
S40/45 CASSETTE 90	**RB12 Limiter**	**RB08 / RB09**	**RB02**	**RB12 Spring**	**Wirefree Motor**	**S45 EL / ML Motor**	**RB09**	**RB08**	**RB07-70**	**RB12 Chain**
	20mm (0.787”)	19mm (0.748”)	19mm (0.748”)		19mm (0.748”)	26mm (1.023”)	18mm (0.709”)	20mm (0.787”)		21mm (0.827”)

Note: For dim-OUT systems using F4115 Bottom Rail, SB06-0210-xxx001 End Cap must be used. Weight Bar deducion will be W – 118mm.

PART B – EASY-LINK ADDITIONAL DEDUCTION ALLOWANCE (CASSETTE 90 ONLY)

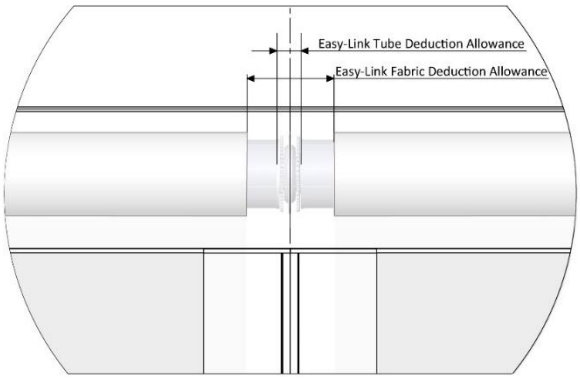

	FABRIC	TUBE
PLAIN CASSETTE	17mm (0.66”)	17mm (0.66”)
dim-OUT	40mm (1.57”)	17mm (0.66”)

© Copyright 2016 | Rollease Acmeda Group

PART C – MAXIMUM ROLL DIAMETERS

Cassette 75

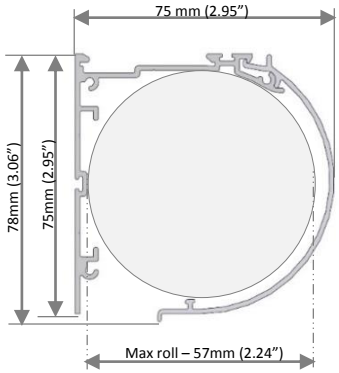

Round Cassette

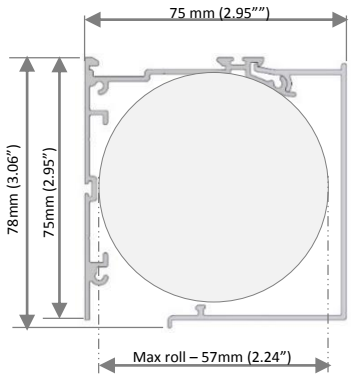

Square Cassette

Cassette 90

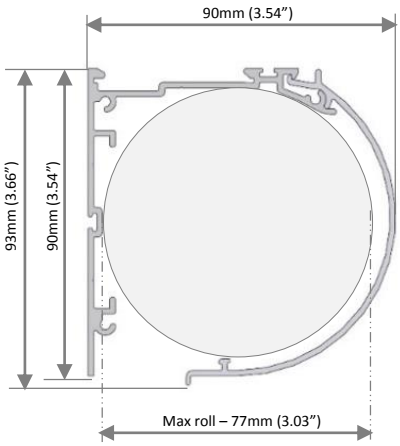

Round Cassette

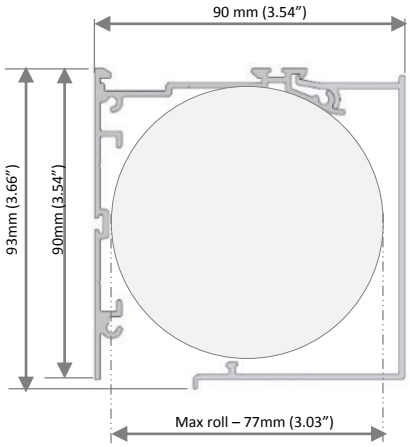

Square Cassette

PART D – BRACKET DIMENSIONS

Cassette 75

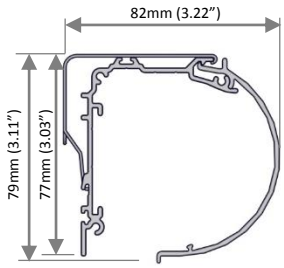

RC03-1003-xxx075

Cassette 90

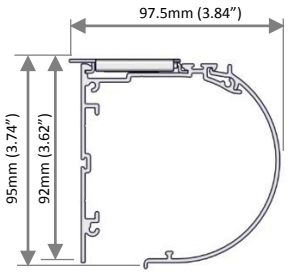

RC03-1001-xxx090

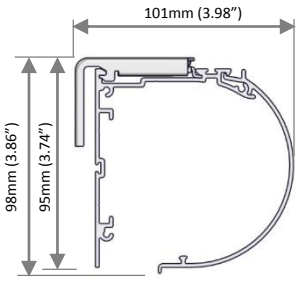

RC03-1002-xxx090

© Copyright 2016 | Rollease Acmeda Group

PART E – ARCHITECTURAL VIEWS

Cassette 75

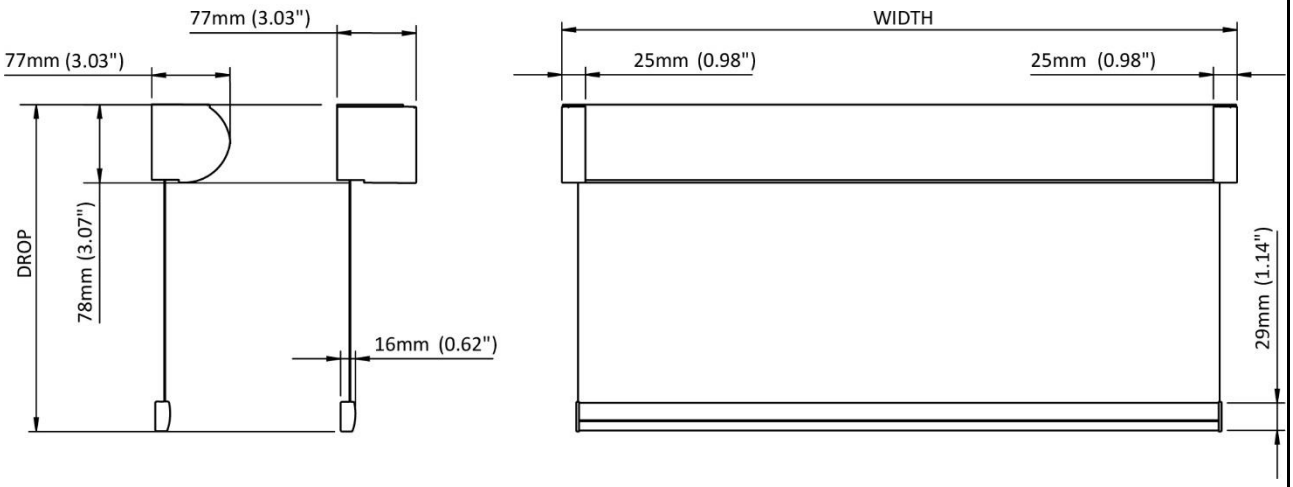

Filename: Arch Specs CF75

Cassette 75 – dim-OUT

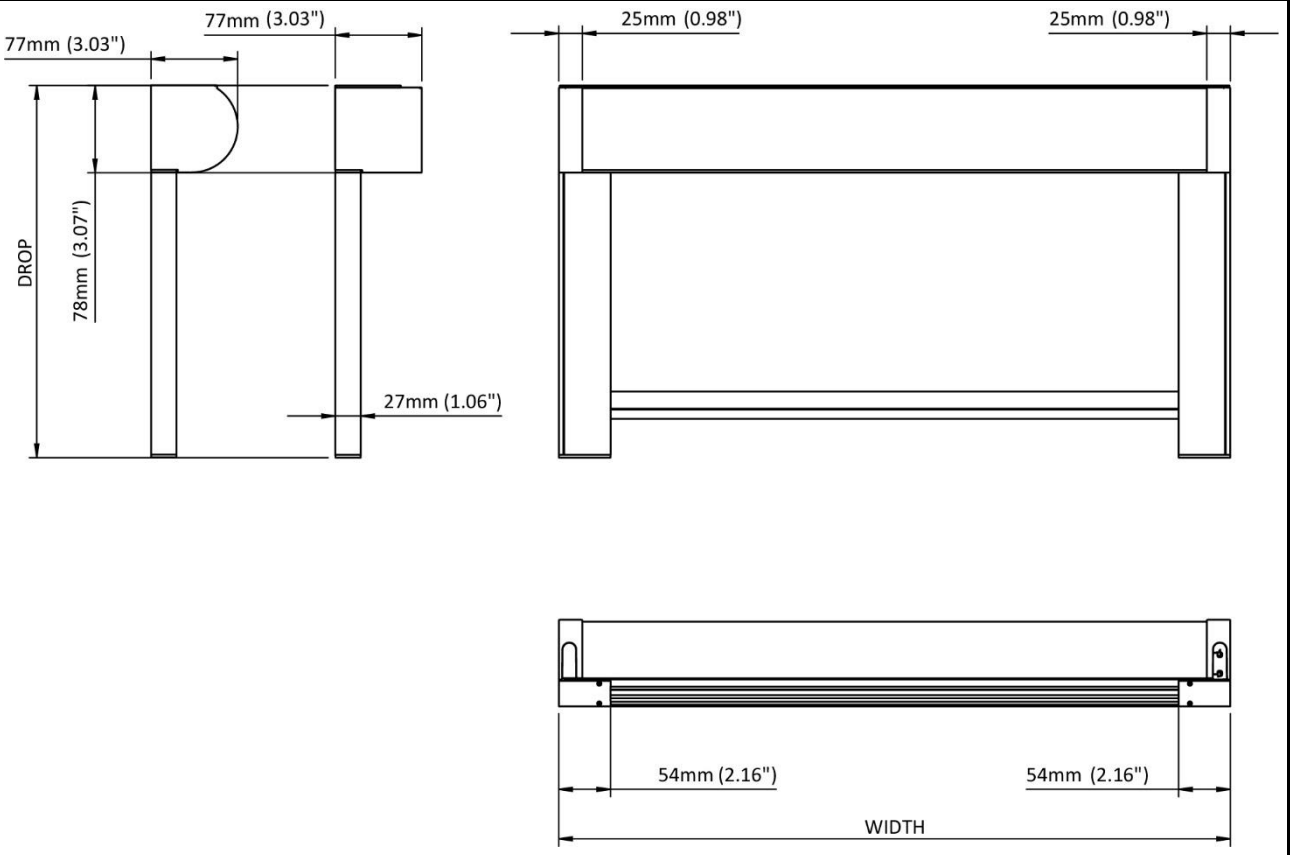

Filename: Arch Specs CF75

© Copyright 2016 | Rollease Acmeda Group

Cassette 90

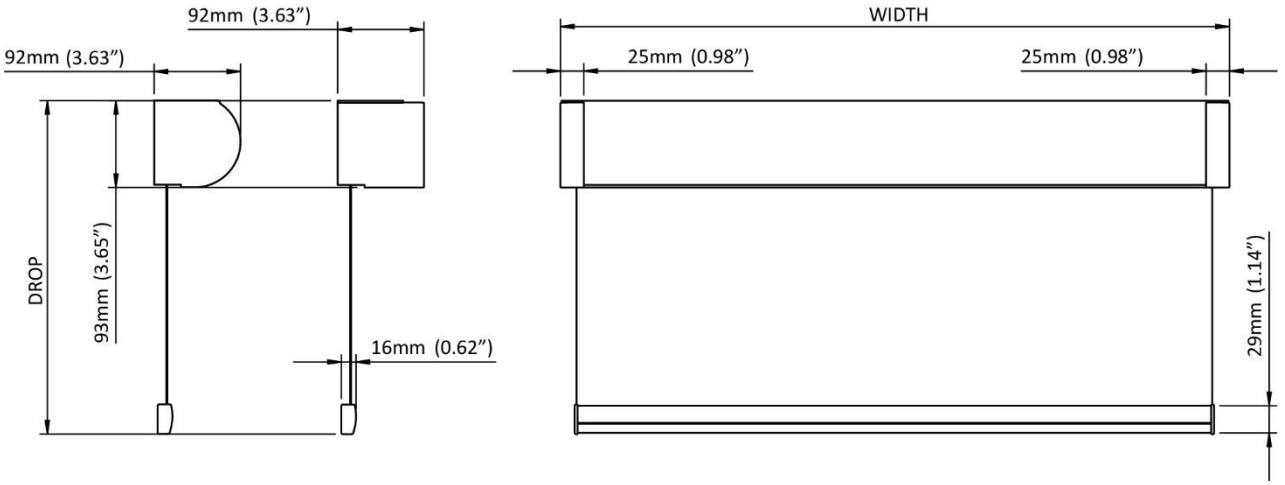

Filename: Arch Specs CF90

Cassette 90 –dim-OUT

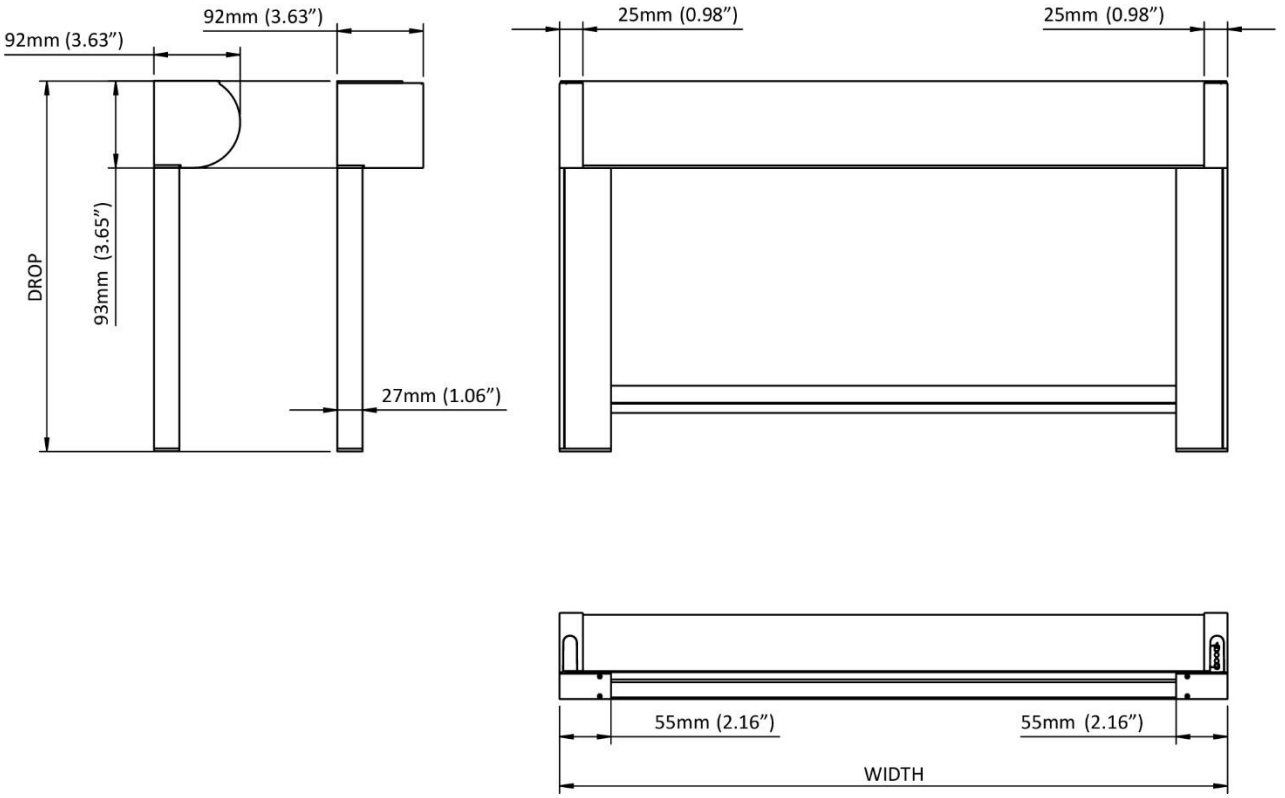

Filename: Arch Specs CF90

© Copyright 2016 | Rollease Acmeda Group

SECTION 7 - PRODUCT IMAGERY

Filename: CAS CF Photo Blnd_001	Filename: CAS CF Photo Blnd_002	Filename: CAS CF Photo Blnd_003
Filename: CAS CF Photo Blnd_004		

© Copyright 2016 | Rollease Acmeda Group

MEASURE & SPECIFY GUIDELINES

In order to assist with providing seamless communication between the Specifier, Assembler and Installer Acmeda provide some guidelines to assist with measuring and specifying the Cassette Roller System in order to:

- Identify key information for Assembler and Installer
- Improve efficiency
- Limit the number of re-calls / adjustment required onsite after installation

The suggested 'Actual Blind Sizes' are based on:
- Minimum clearances to assist installers

(some installers may request greater clearances for some application, e.g. installing onto brick)

MEASURING TIPS

TIP 1: CHECK TOP OF INSTALLATION SPACE IS LEVEL

If Top of Installation Space is uneven, ensure 'Top Width' measurement and all 'Drop' measurements are taken from 'Lowest Top Point' (dotted line indicated below)

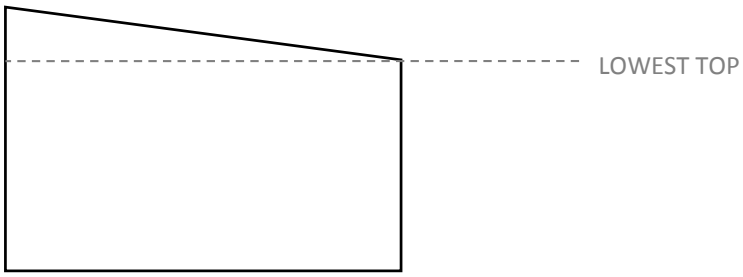

TIP 2: FOR BLIND INSTALLATIONS, TAKE NOTE OF MEASUREMENTS BELOW -

Installation Width at Top, Bottom (and Centre for dimOUT installations only)

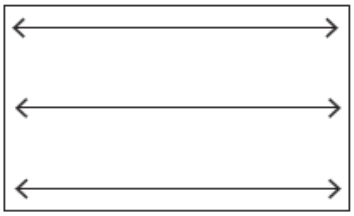

Installation drop at Left and Right.

For best installation and operation results, it is favourable for the measurements to be within:

- 5mm of each other for dimOUT Installations.
- 15mm of each other for plain cassette/fascia installations.

© Copyright 2016 | Rollease Acmeda Group

BLIND DROP	EXAMPLE
For all scenarios Top & Bottom level Top uneven & Bottom level Top level & Bottom uneven^ Top & Bottom uneven^ **Blind Drop = Smallest Drop Size**	Top & Bottom uneven **LEFT (2040mm)** **RIGHT (2000mm)** **Blind Drop = Smallest Drop Size** **= Right Hand Drop Size (2000mm)**

For dim-OUT blind installations	
BLIND WIDTH	**EXAMPLE**
Top width must be larger than or equal to Bottom Width If measured width (at top) is larger than width at bottom Blind Width = bottom width	TOP (2016mm) CENTRE (2008mm) BOTTOM (2000mm) **Blind Width = 2000mm**

© Copyright 2016 | Rollease Acmeda Group

CUSTOMER DETAILS	
Customer's Name:	
Job Number:	

INSTALLATION SPACE

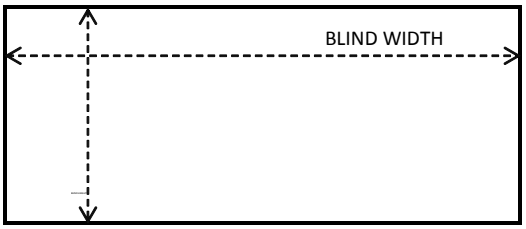

	TOP WIDTH (mm)
	CENTRE WIDTH (mm)
	BOTTOM WDITH (mm)
	PACKING REQUIRED? Y/N

Left Drop (mm)	Right Drop (mm)

ACTUAL BLIND SIZE

BLIND WIDTH (mm)	
BLIND HEIGHT (mm)	

INSTALLATION DETAILS

Number of Blinds?	
Face / Top / Side Fix?	
Building surface system is being fixed to?	
Do any window trims need attention?	

© Copyright 2016 | Rollease Acmeda Group

BLIND DETAILS

CASSETTE SIZE	
CASSETTE 75	
CASSETTE 90	

ALUMINIUM TUBE TYPE	
S35 |STD	
S35 |HD Tube	
S40 | 39 SPLINE	
S40 | STD	
S40 | HD	
S45 |SPLINE	
S45 |STD (T-Spline)	
S45 |HD	

SIDE GUIDE TYPE	
dim-Out	

CONTROL SIDE	
LEFT HAND	
RIGHT HAND	

CONTROL TYPE	
S35 CHAIN WINDER	
S35 MOTOR	
S35 SPRING	
S40/45 CHAIN WINDER	
S40/45 MOTOR	
S40/45 SPRING	

WEIGHT BAR TYPE	
D30	

SYSTEM COLOUR

FABRIC TYPE & COLOUR

© Copyright 2016 | Rollease Acmeda Group