NEW PRODUCT | F72 Straight Drop Solution

	PRODUCT DETAILS	
DESCRIPTION.	F72 Plain End Cap Set + Screws	25mm Footmans Loop Kit | F72
CODE.	RE15-0540-050000	RE91-1111-013025
PACK SIZE.	5 | 200 Sets	5 | 100 Sets
PRICE.		
COLOR / FINISH.	Black (050)	Stainless Steel (013)
IMAGE.	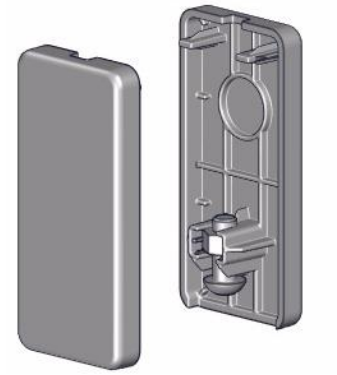	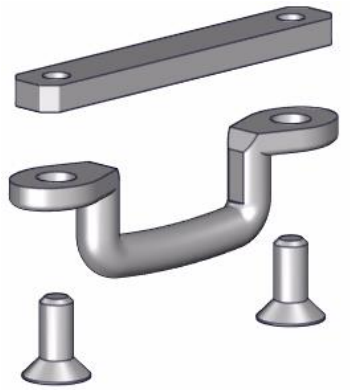
USE WITH.	F72 Weight Bar	F72 Weight Bar, Strap Down Options
AVAILABLE.	March 2021	May 2021

FEATURES & BENEFITS

F72 Plain End Cap Set + Screws

- Clean aesthetic achieved by removing screws from view.
- Recess for internal screw to pin fabric spline, allowing endcap to sit flush with the weight bar.
- Secure end cap to weight bar by fastening the screw from underneath.

25mm Footmans Loop Kit | F72

- Provides robust method of attaching the Footmans loop securely to the F72 Weight Bar where a strap down loop is required.
- Simply fasten the countersunk screws into the pre-tapped backing plate to lock into place.

ROLLEASE ACMEDA
PRECISION IN MOTION